



90 min

TIRENO BIS II



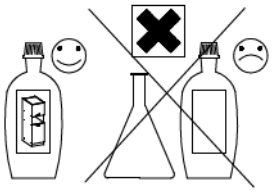

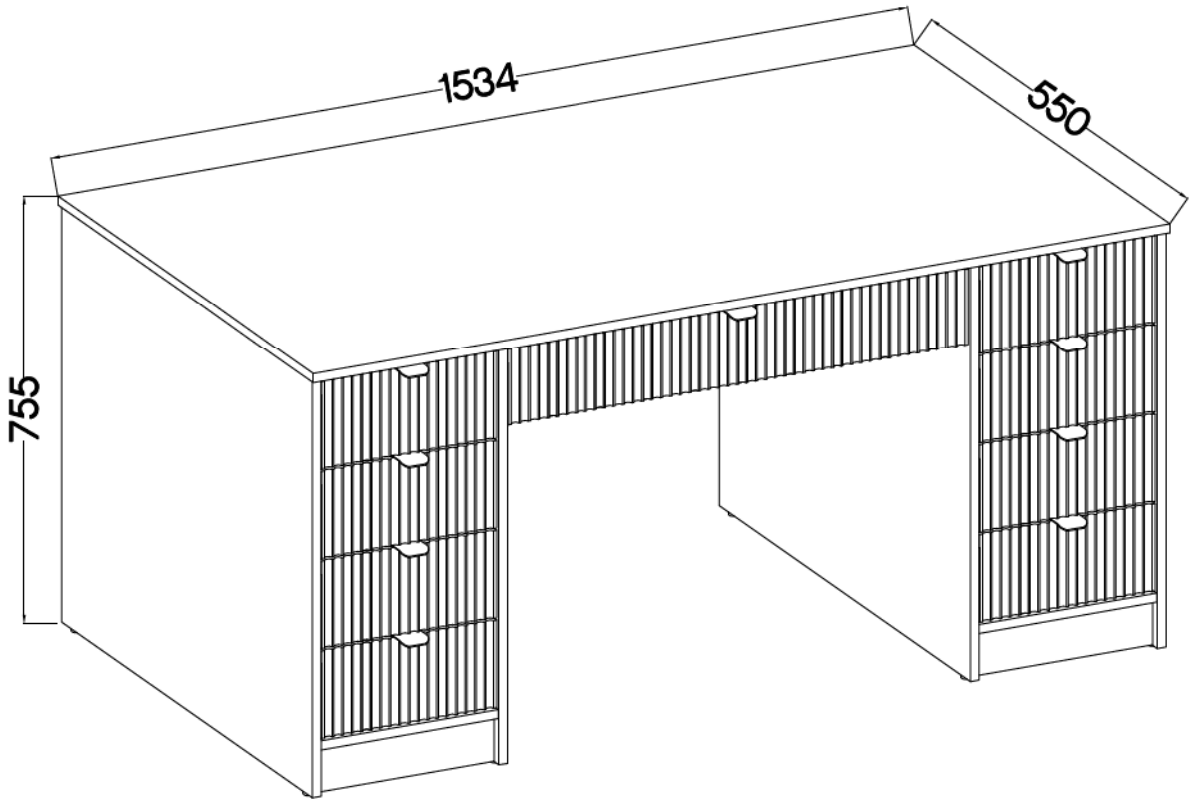

⌀8x30mm	⌀6x42mm
 A	 B2
56	18

⌀15/12mm	⌀12/10mm	L=20/8mm		⌀5	⌀15x5mm	27/310mm		⌀6,3x13mm	L=32mm	M4x9mm
 C	 C5	 D9	 E	 E2	 F4	 I4	 L	 M2	 S	 U1
24	18	42	8	2	8	9	20	36	9	18

ISM-ADA-008

Desk and dressing table Tireno Bis
Video Assembling Instruction

Schreibtisch und Schminktisch Tireno Bis
Video Montageanleitung

Biurko i toaletka Tireno Bis
Video Instrukcja montażu





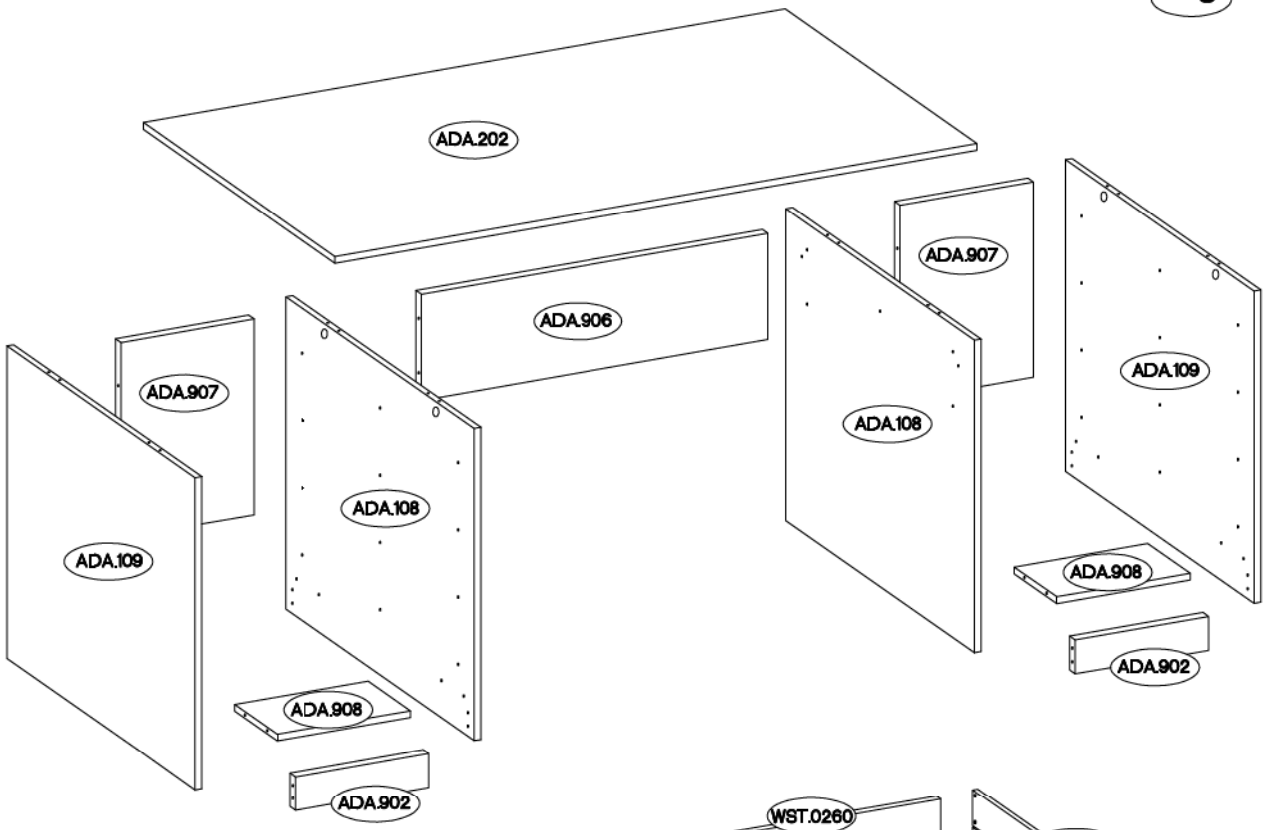

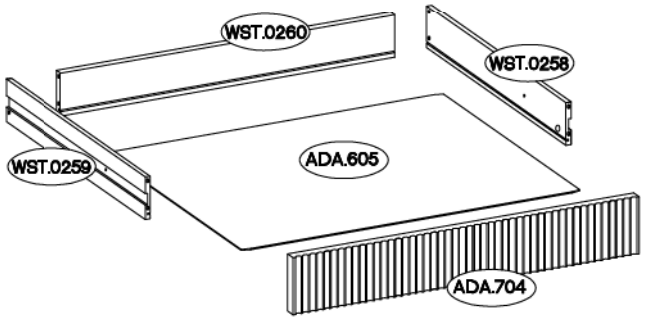

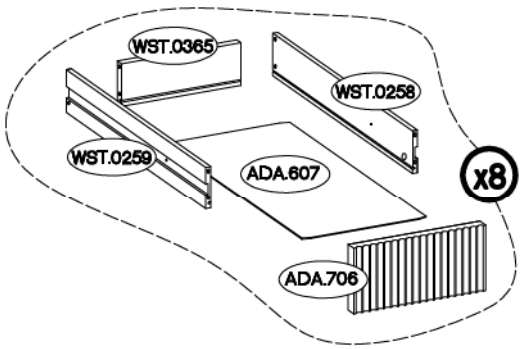

Colli	Ersatzteil Nummer	Dimension
Colli 1/2	ADA.108 x2	734x540x16
	ADA.109 x2	734x540x16
	ADA.605	807x397x2,5
	ADA.706 x8	154x314x16
	ADA.704	134x825x16
	ADA.906	829x250x16
	ADA.907 x2	318x460x16
	ADA.902 x2	318x80x16
	ADA.908 x2	318x122x16
Colli 2/2	ADA.202	1534x550x16
	ADA.607 x8	296x397x2,5
	WST.0258 x9	400x100x12
	WST.0259 x9	400x100x12
	WST.0260	796x100x12
	WST.0265 x8	285x100x12

1

ϕ12/10mm	ϕ8x30mm
 C5	 A
2	4

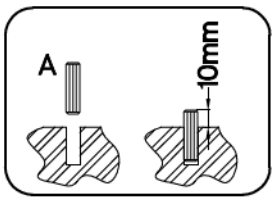

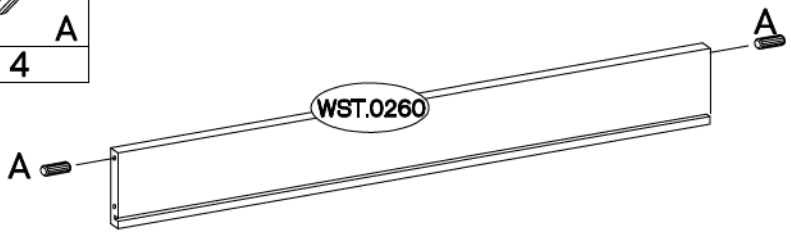

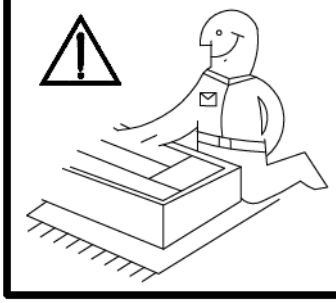

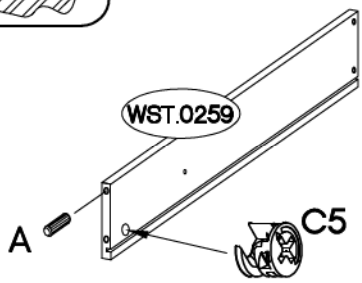

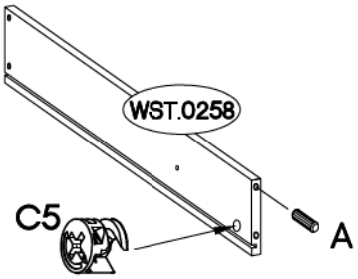

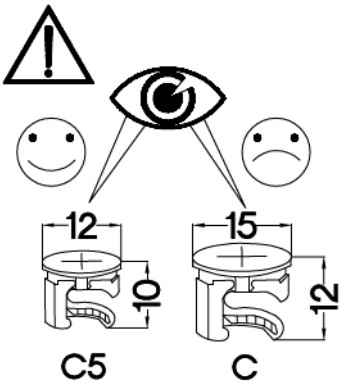

2

ϕ6x42mm
 B2
2

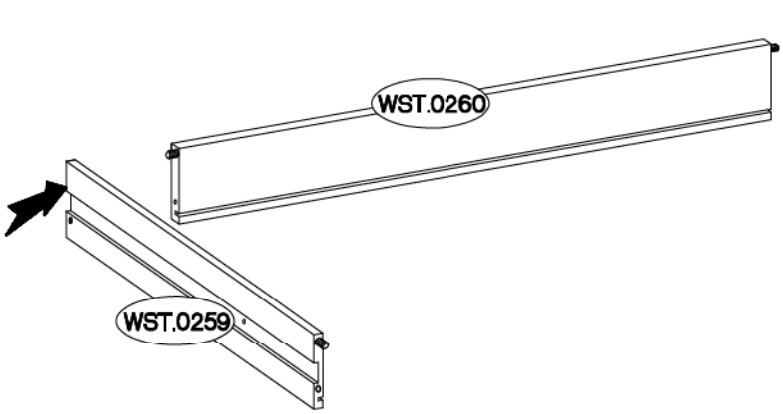

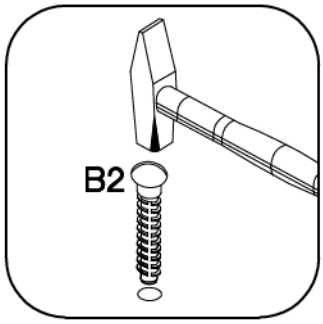

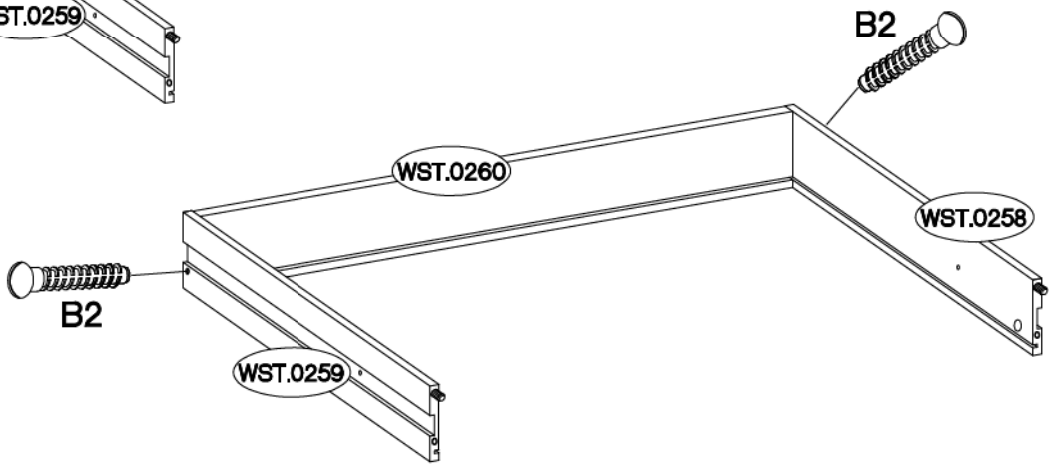

3

L=20/8mm
 D9
2



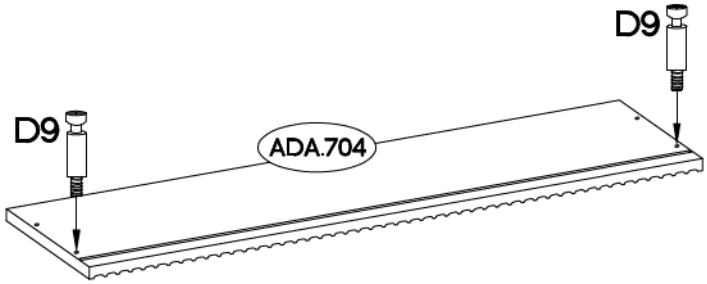

4

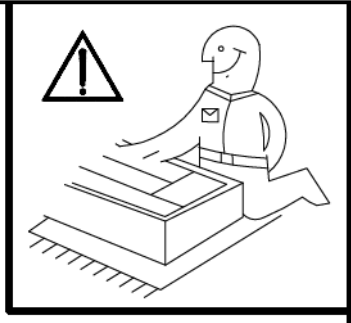

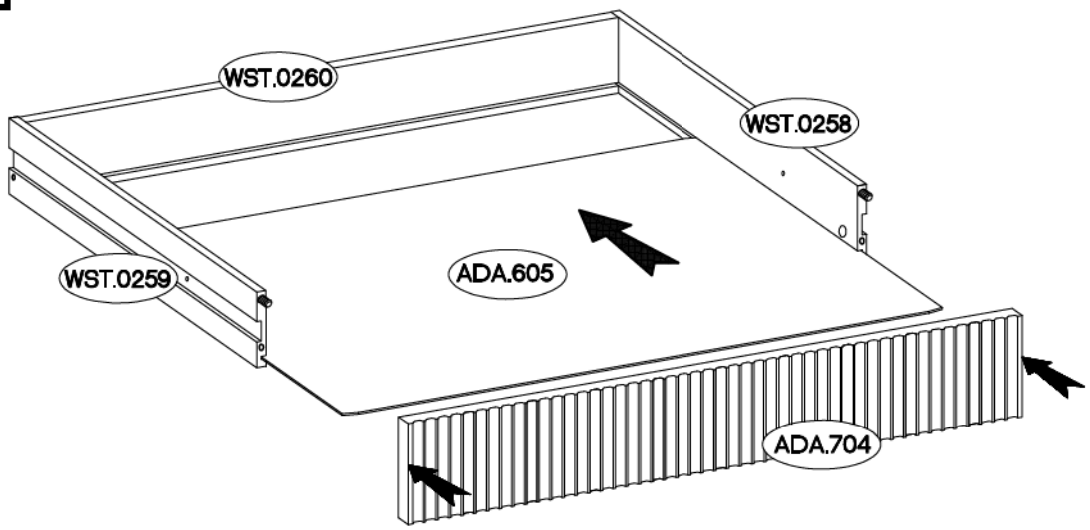
WST.0260
WST.0258
WST.0259
ADA.605
ADA.704

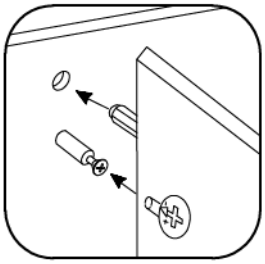

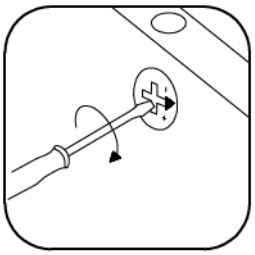

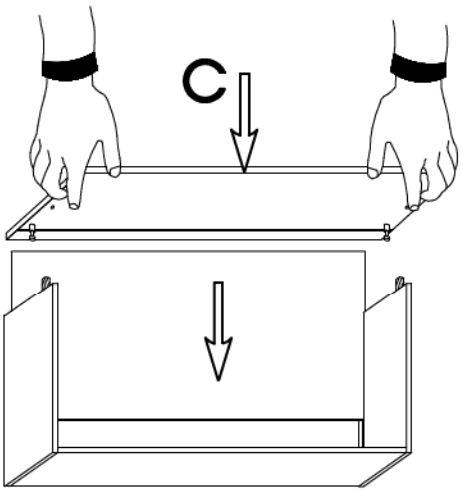
C

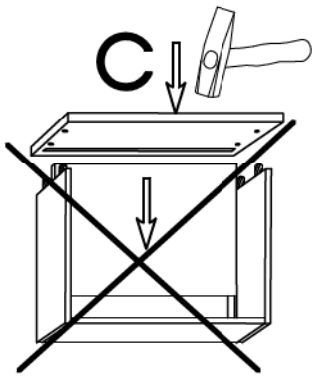
C

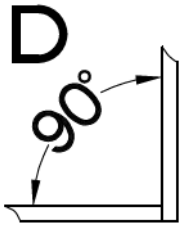
D
90°

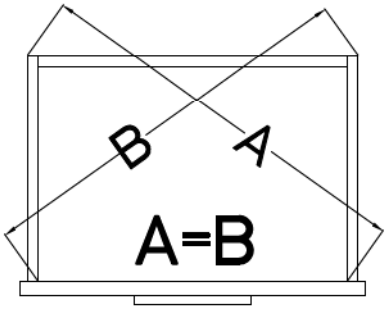
B
A
A=B

5

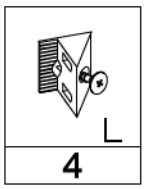
L
4

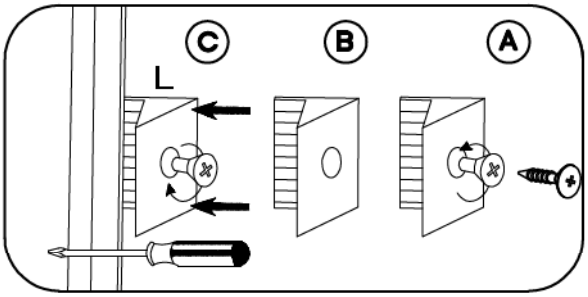
C
B
A
L

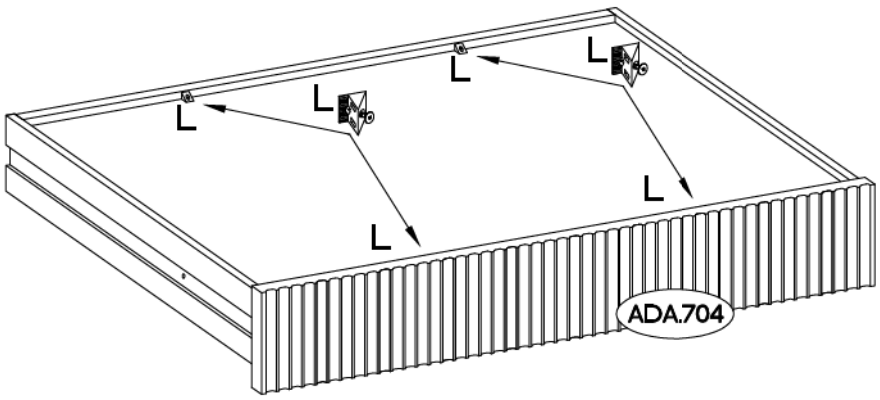
L
L
L
L
L
L
ADA.704

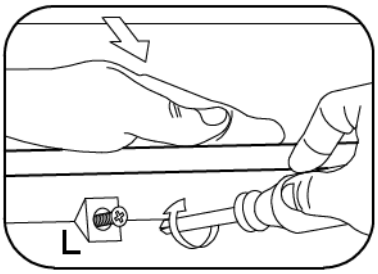
L

6

⌀12/10mm	⌀8x30mm
C5	A
16	32

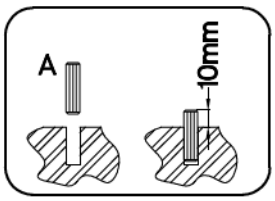

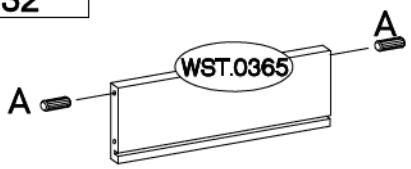

x8

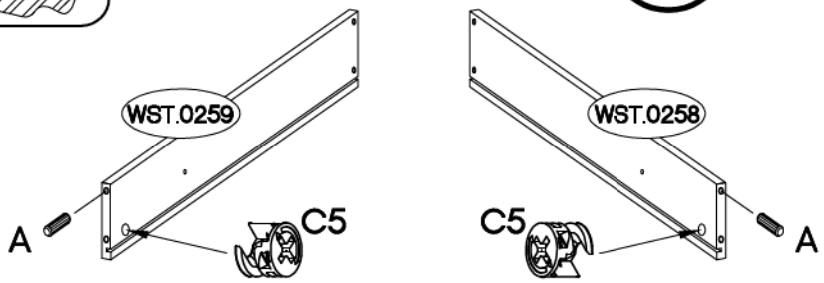

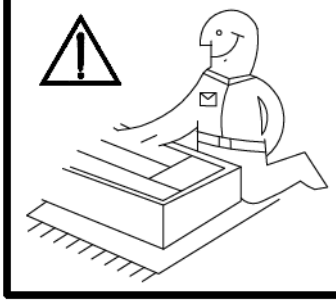

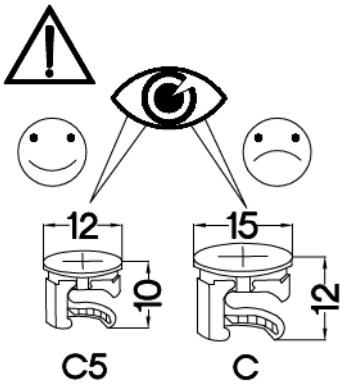

7

⌀6x42mm
B2
16

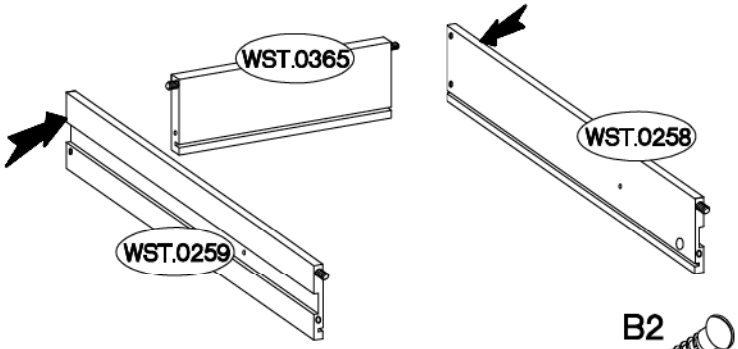

x8

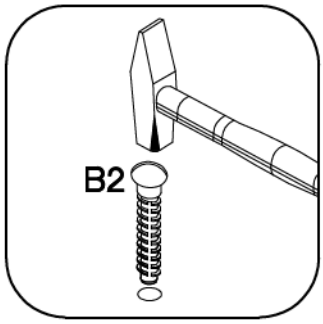

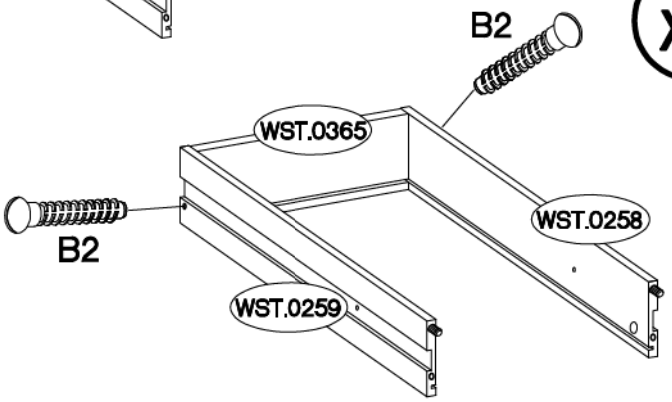

8

L=20/8mm
D9
16



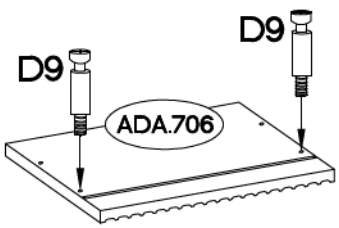

x8

9

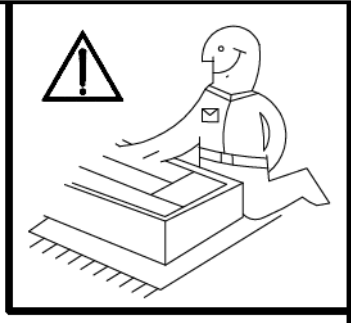

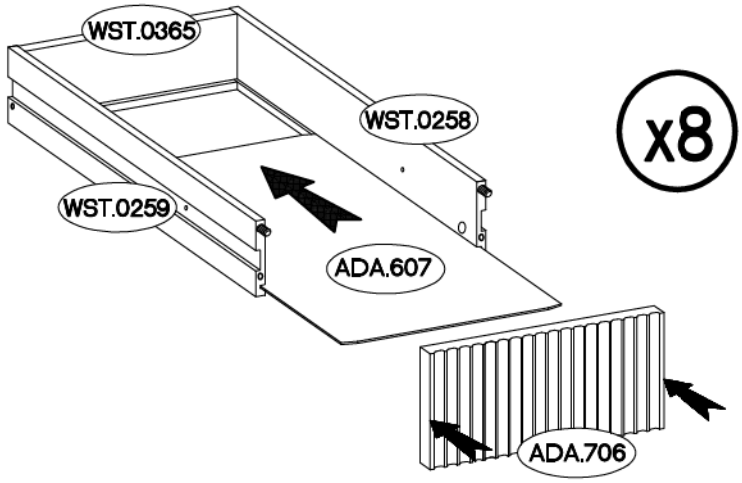
WST.0365
WST.0258
WST.0259
ADA.607
ADA.706

x8

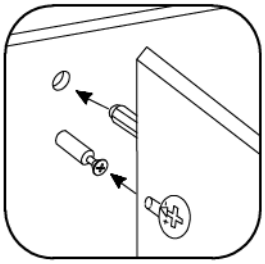

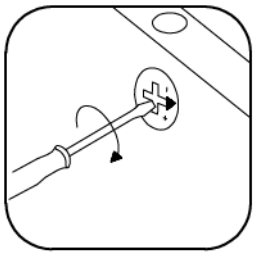

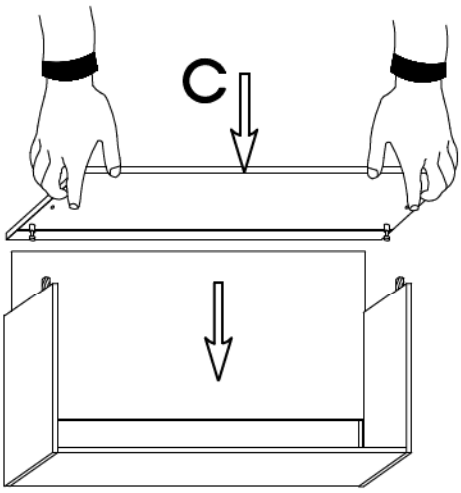
C

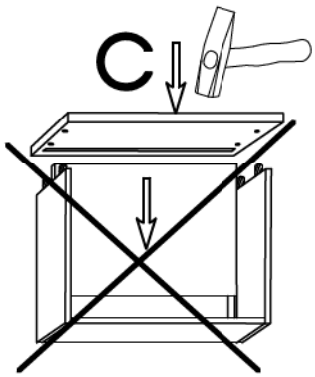
C

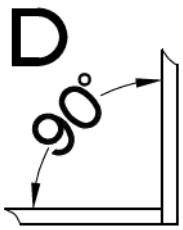
D
90°

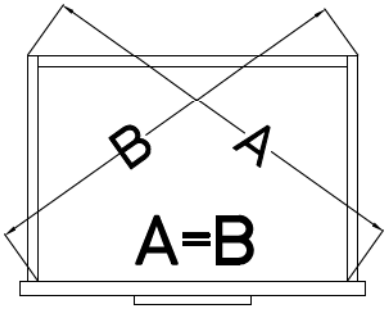
B
A
A=B

10

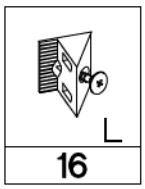
L
16

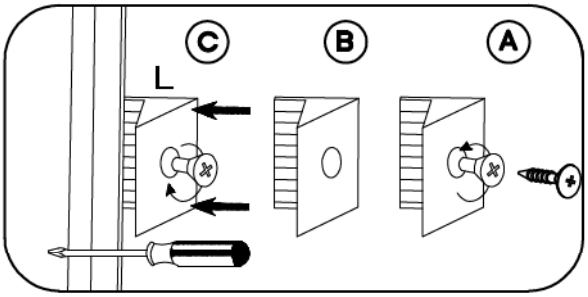
C
B
A
L

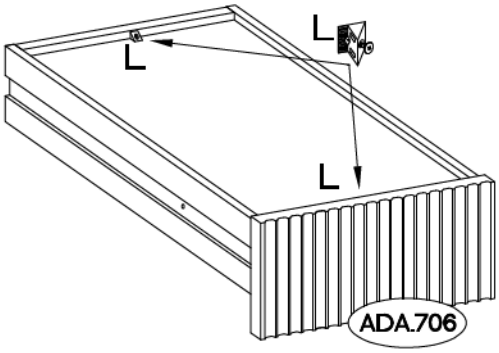
L
L
L
ADA.706

x8

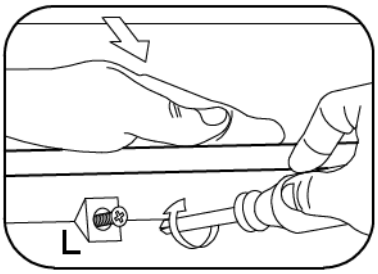
L

11

⌀8x30mm	⌀15/12mm	L=20/8mm	⌀15x5mm	27/310mm	⌀6,3x13mm
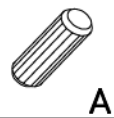 A	 C	 D9	 F4	 I4	 M2
8	8	16	8	9	36

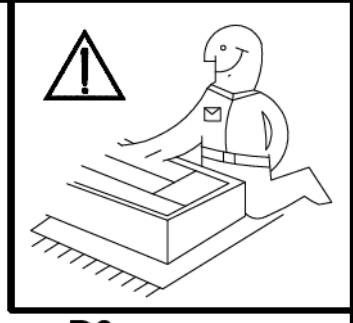

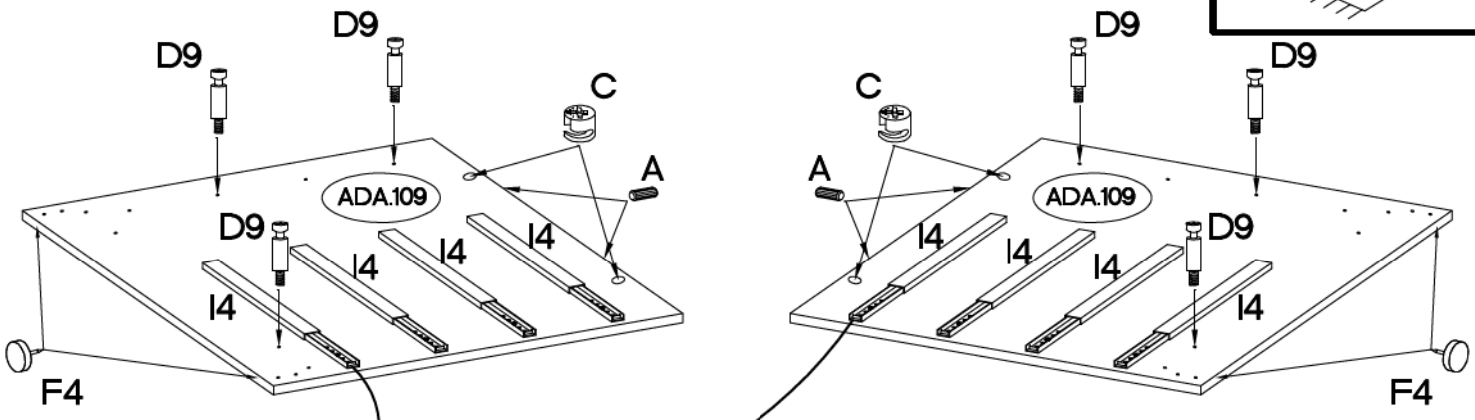

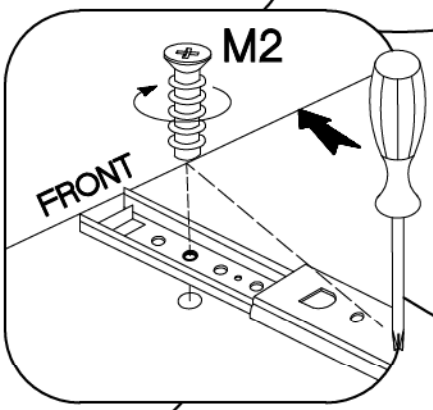

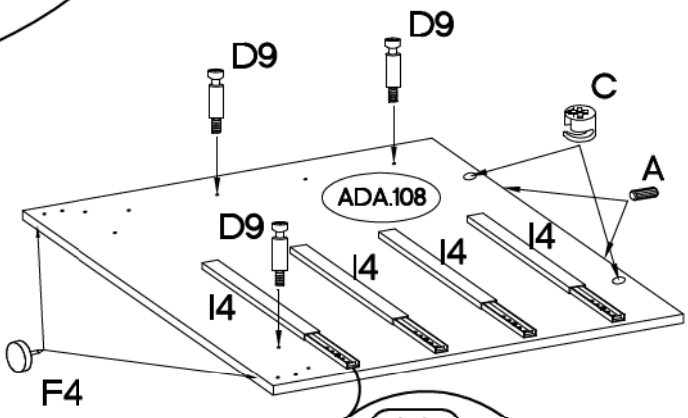

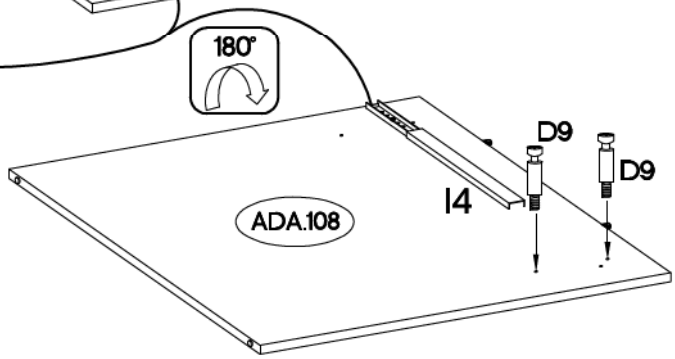

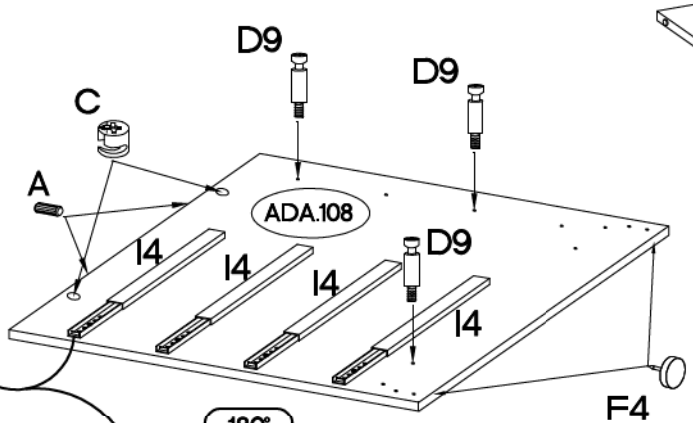

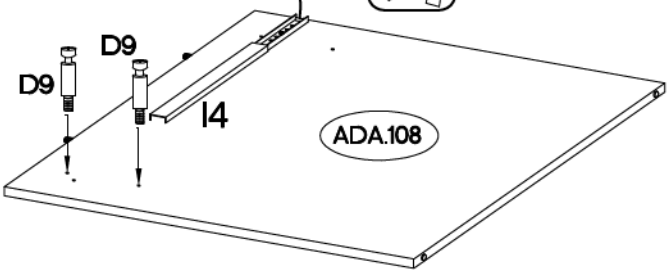

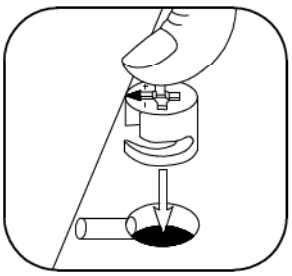

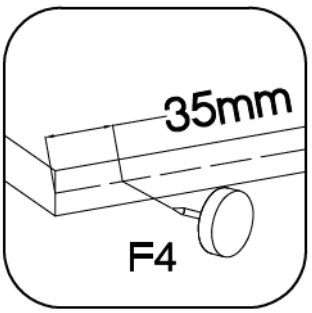

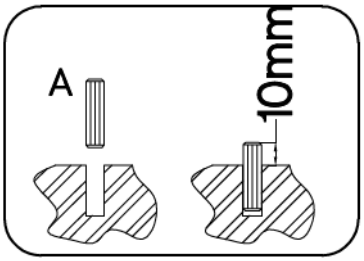

12

⌀8x30mm	⌀15/12mm	L=20/8mm
 A	 C	 D9
12	16	8

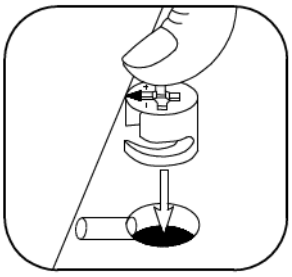

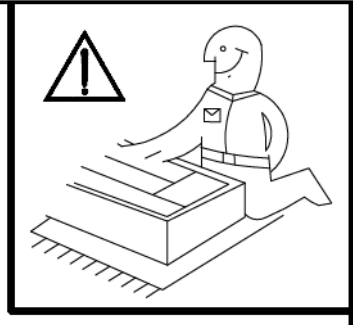

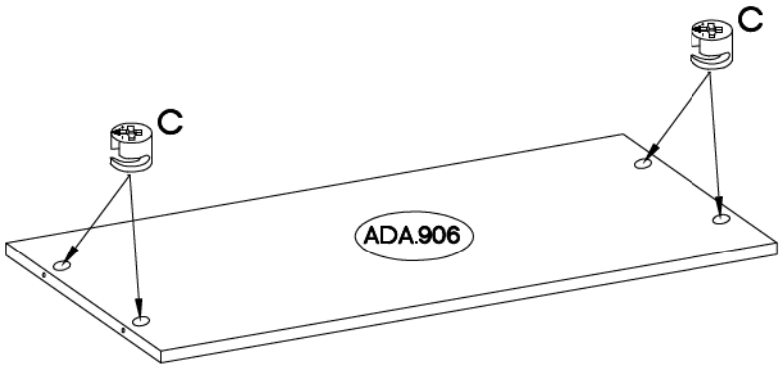

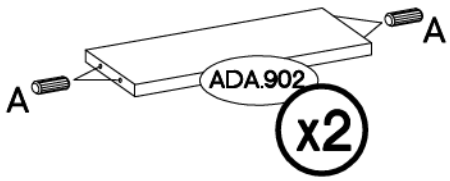

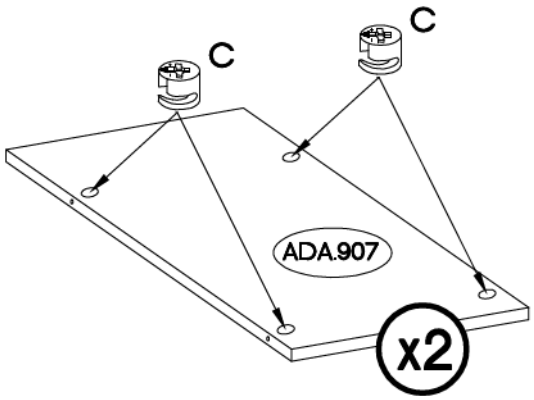

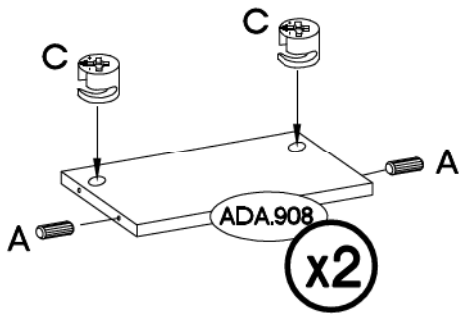

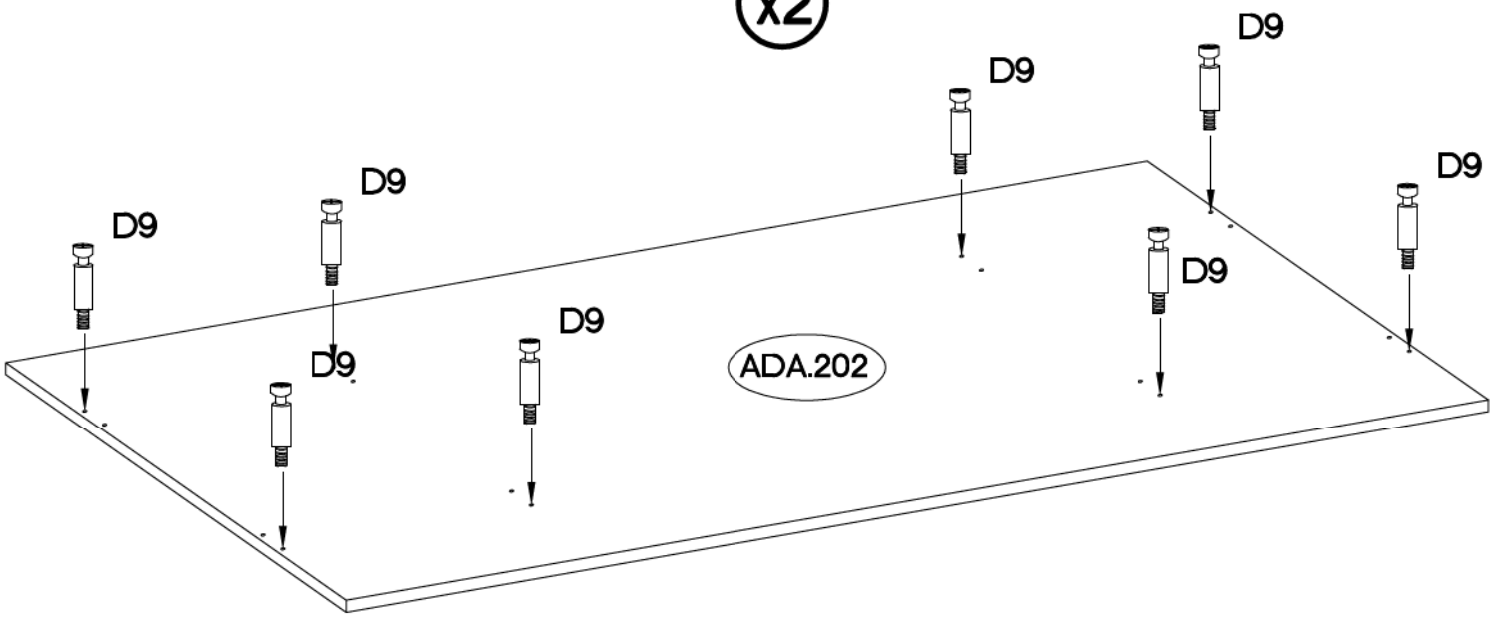

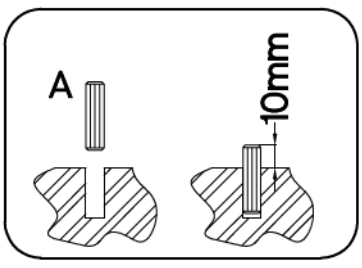

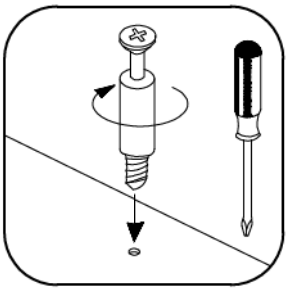





13

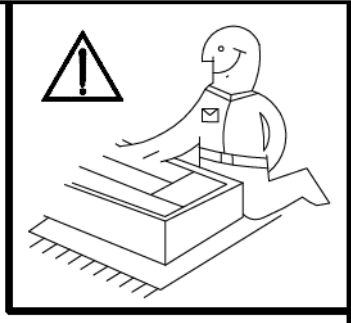

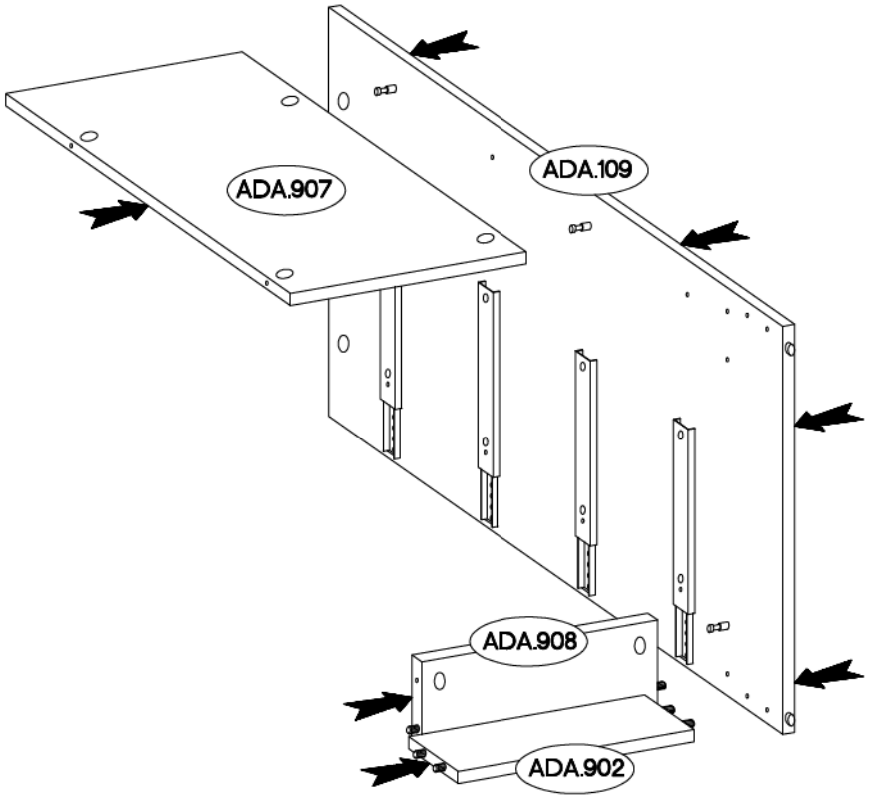
ADA.907
ADA.109
ADA.908
ADA.902

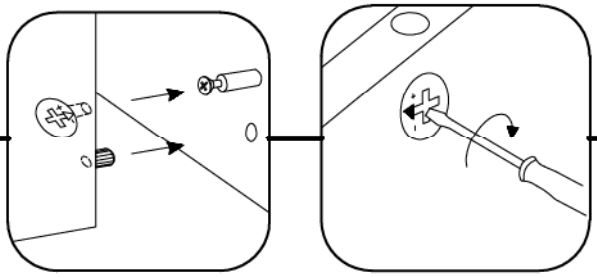

14

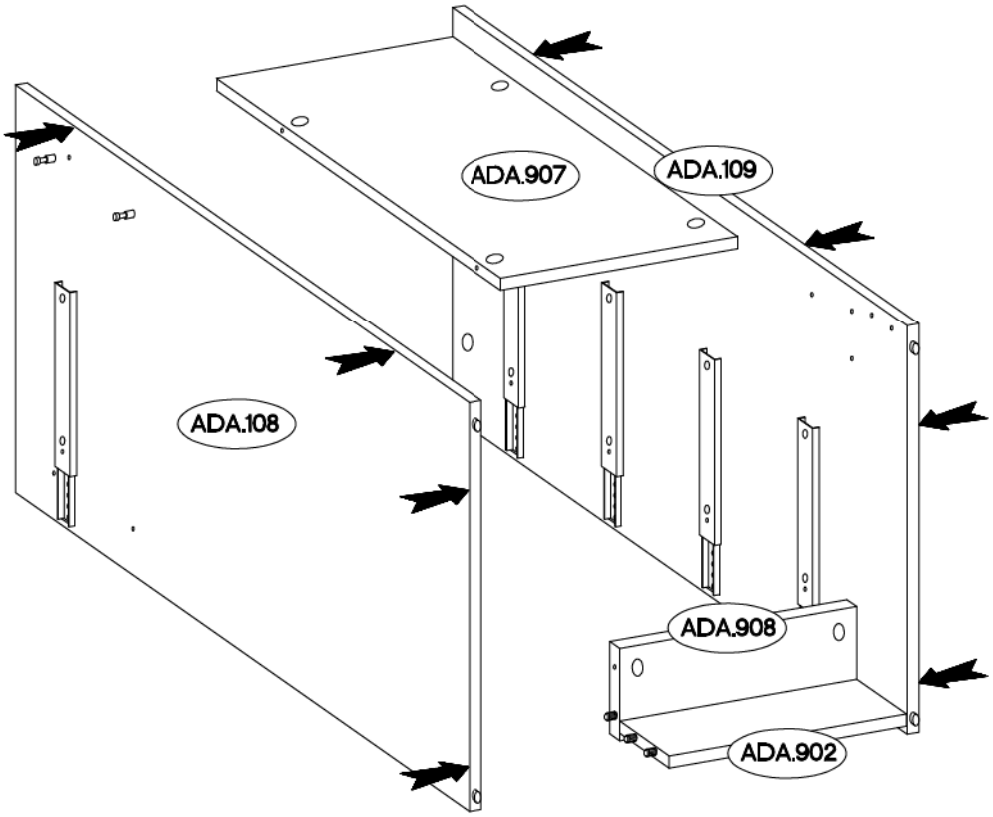
ADA.907
ADA.109
ADA.108
ADA.908
ADA.902

15

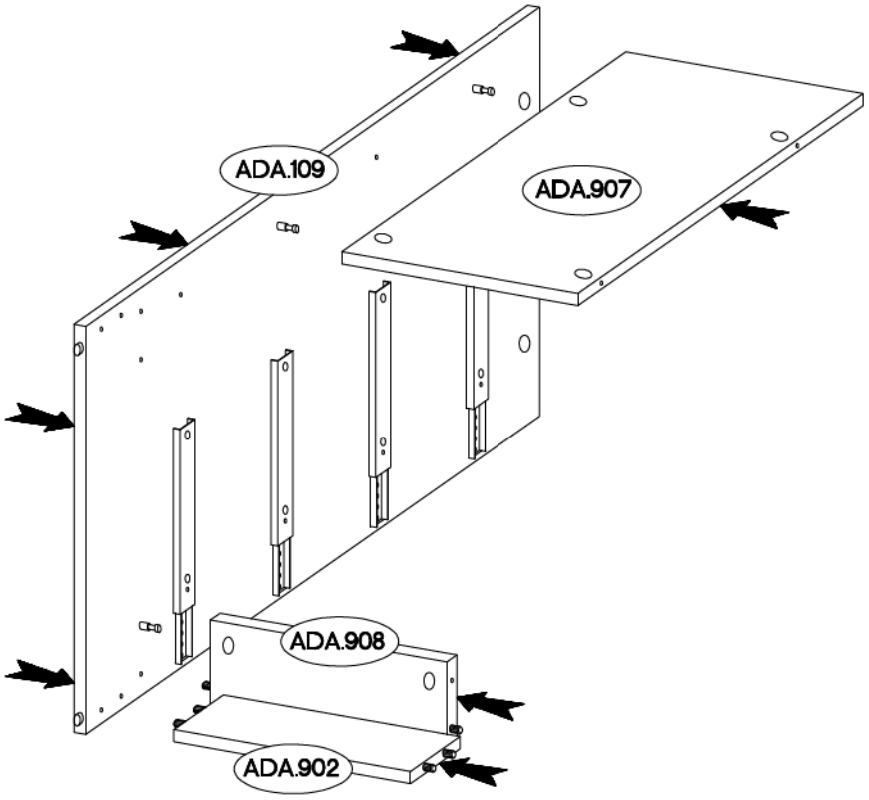
ADA.109
ADA.907
ADA.908
ADA.902

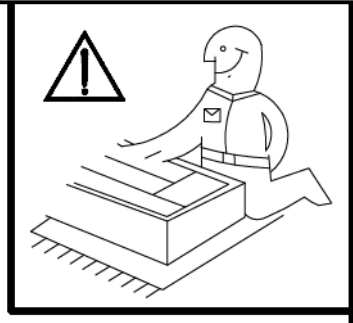

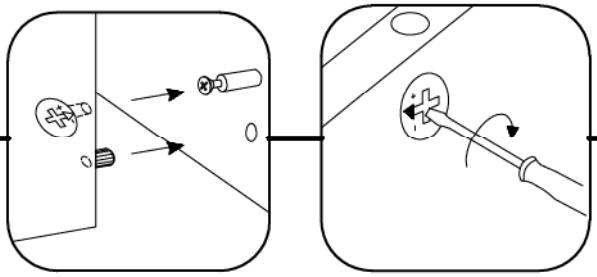

16

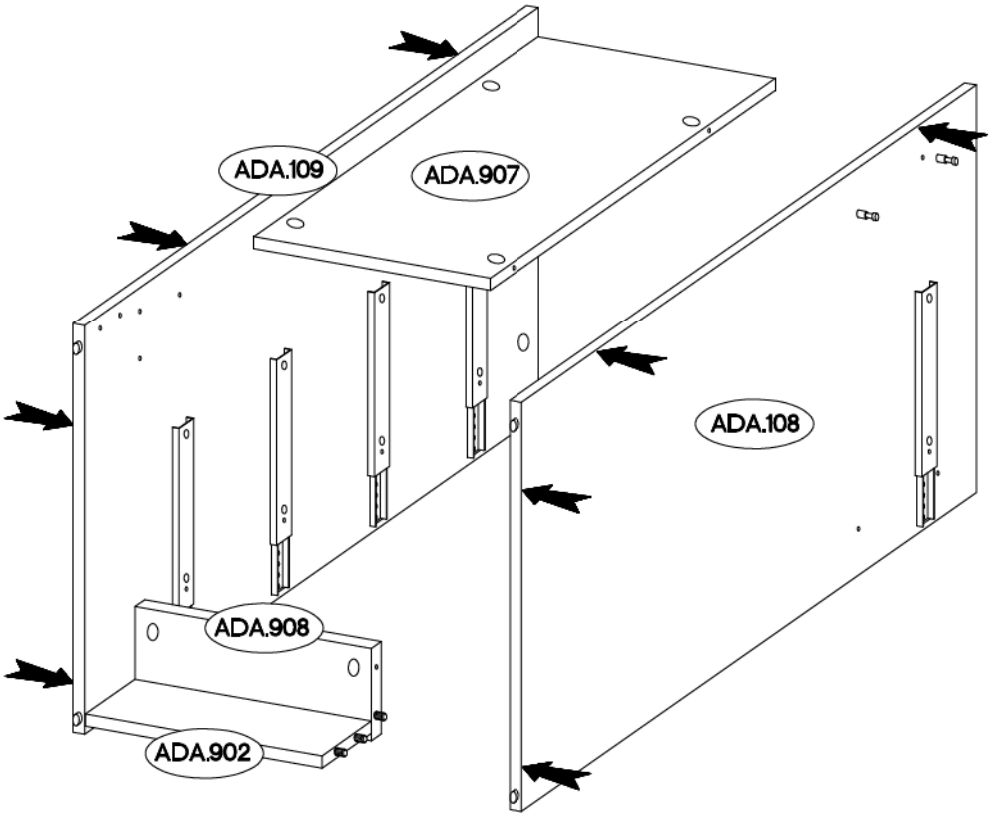
ADA.109
ADA.907
ADA.108
ADA.908
ADA.902

17

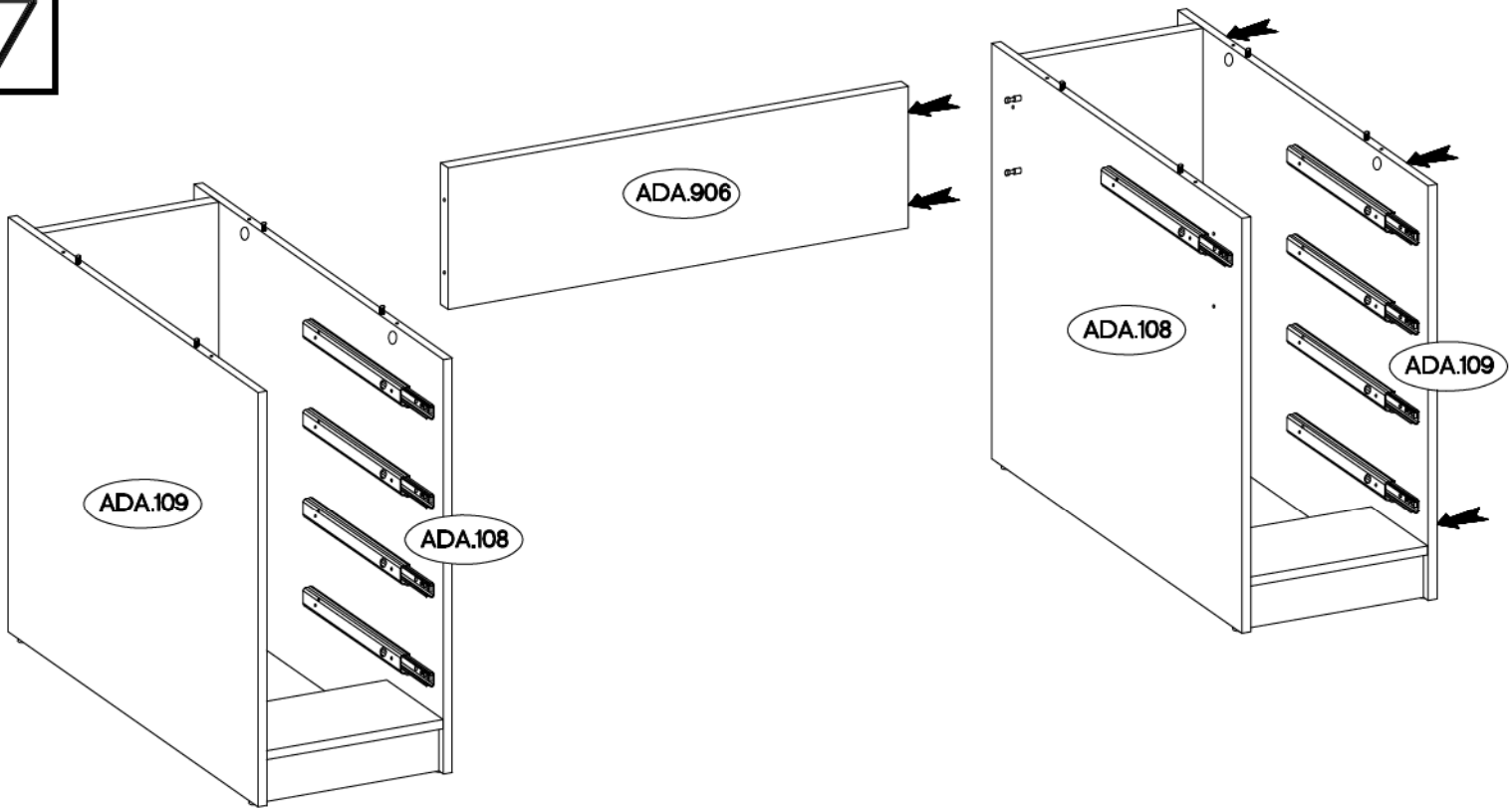
ADA.906
ADA.109
ADA.108
ADA.108
ADA.109

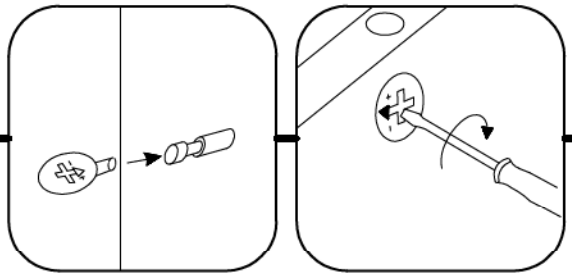

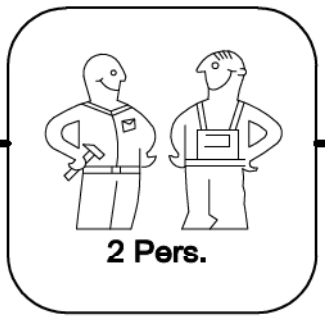
2 Pers.

18

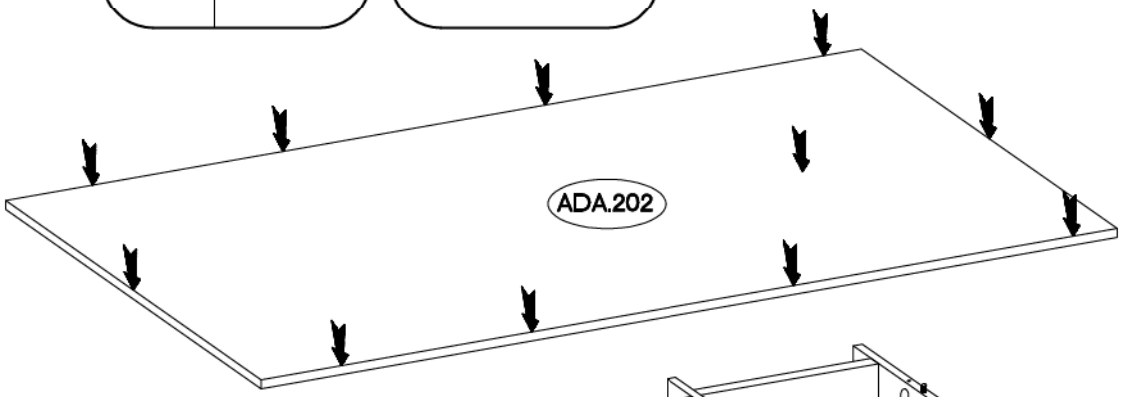
ADA.202

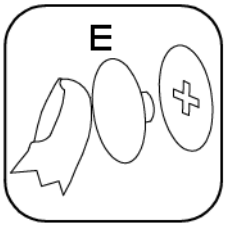
E

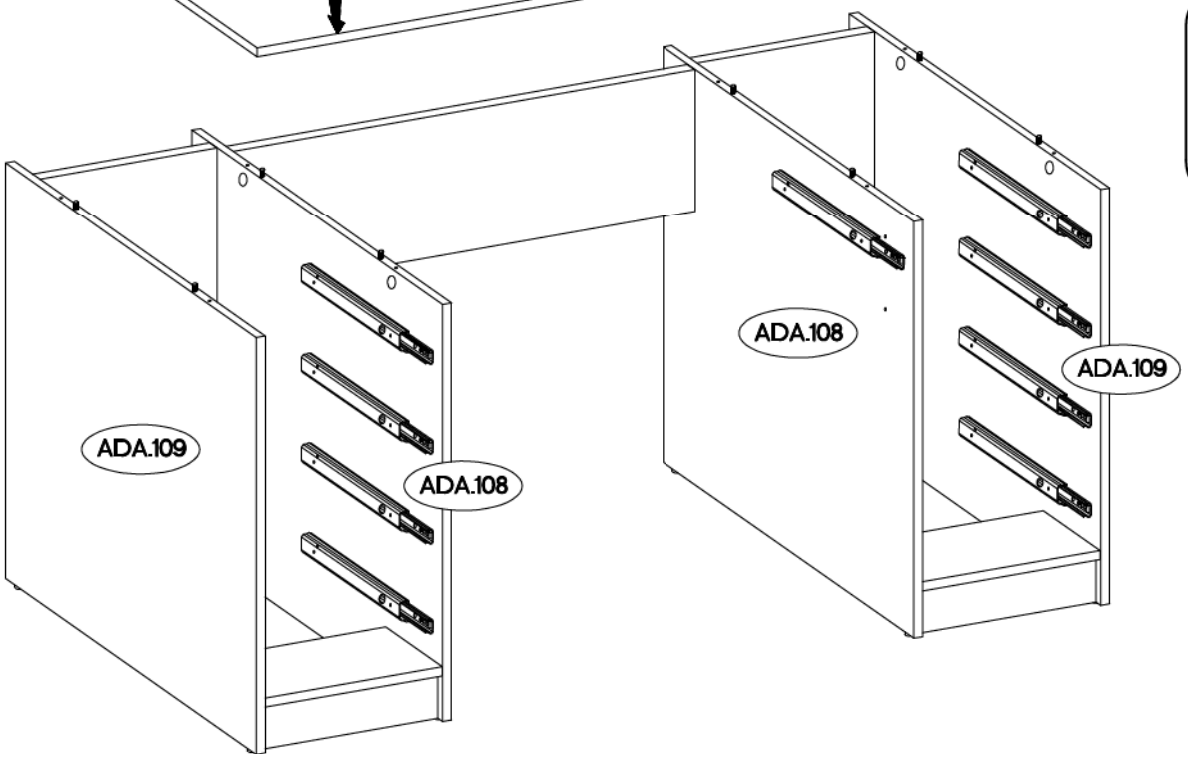
ADA.109
ADA.108
ADA.108
ADA.109

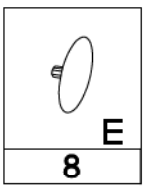
E
8

19

M4x9mm	⌀5	L=32mm
 U1	 E2	 S
18	2	9

