



ADA II



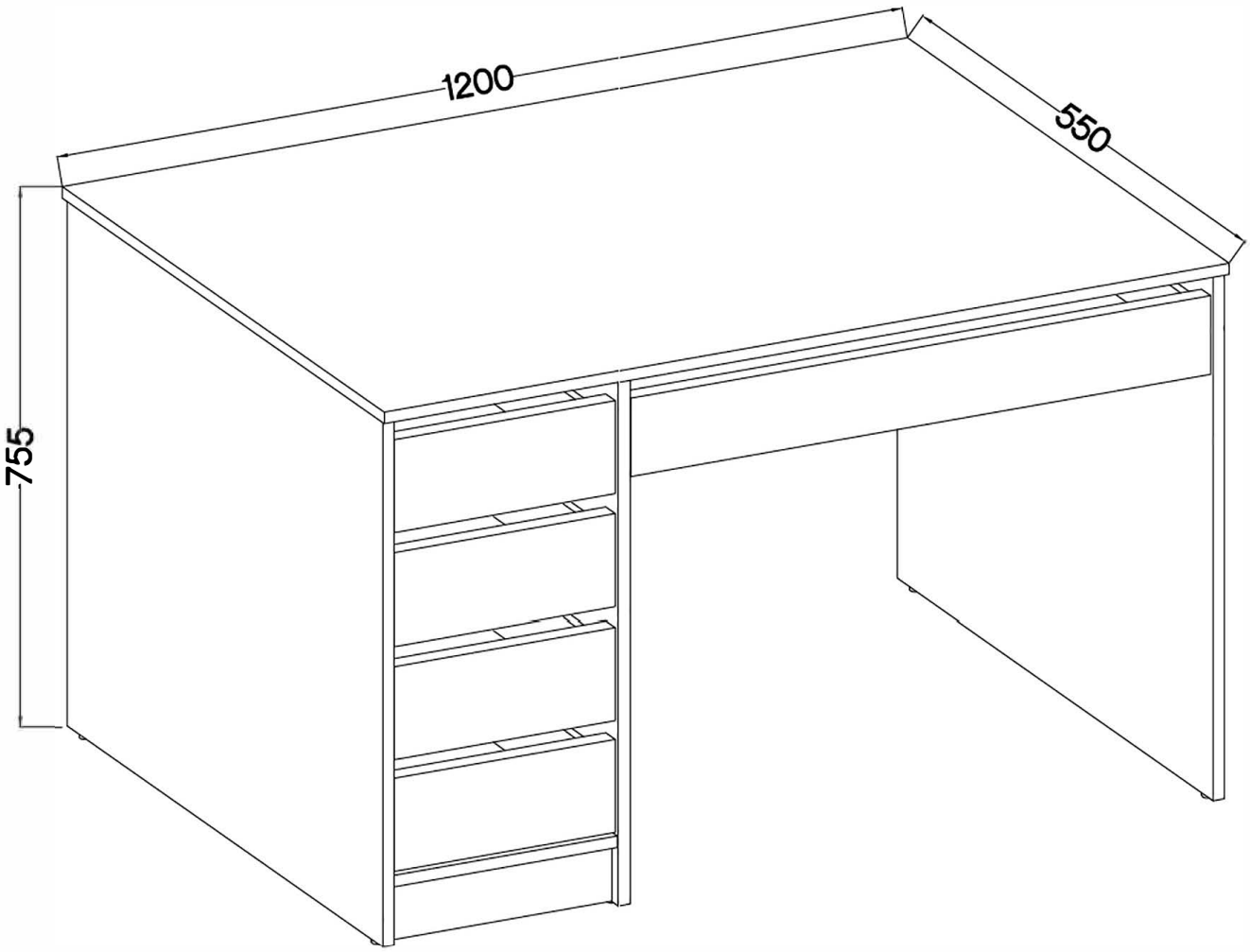

⌀8x30mm										
 A										
32										
⌀6x42mm	⌀15/12mm	⌀12/10mm	L=20/8mm		⌀5	⌀15x5mm	27/310mm		⌀6,3x13mm	M4x9mm
 B2	 C	 C5	 D9	 E	 E2	 F4	 I4	 L	 M2	 U1
10	16	10	26	6	2	6	5	12	20	10

ISM-ADA-005

Desk and dressing table Ada
Video Assembling Instructions

Schreibtisch und Schminktisch Ada
Video Montageanleitung

Biurko i toaletka Ada
Video Instrukcja montażu



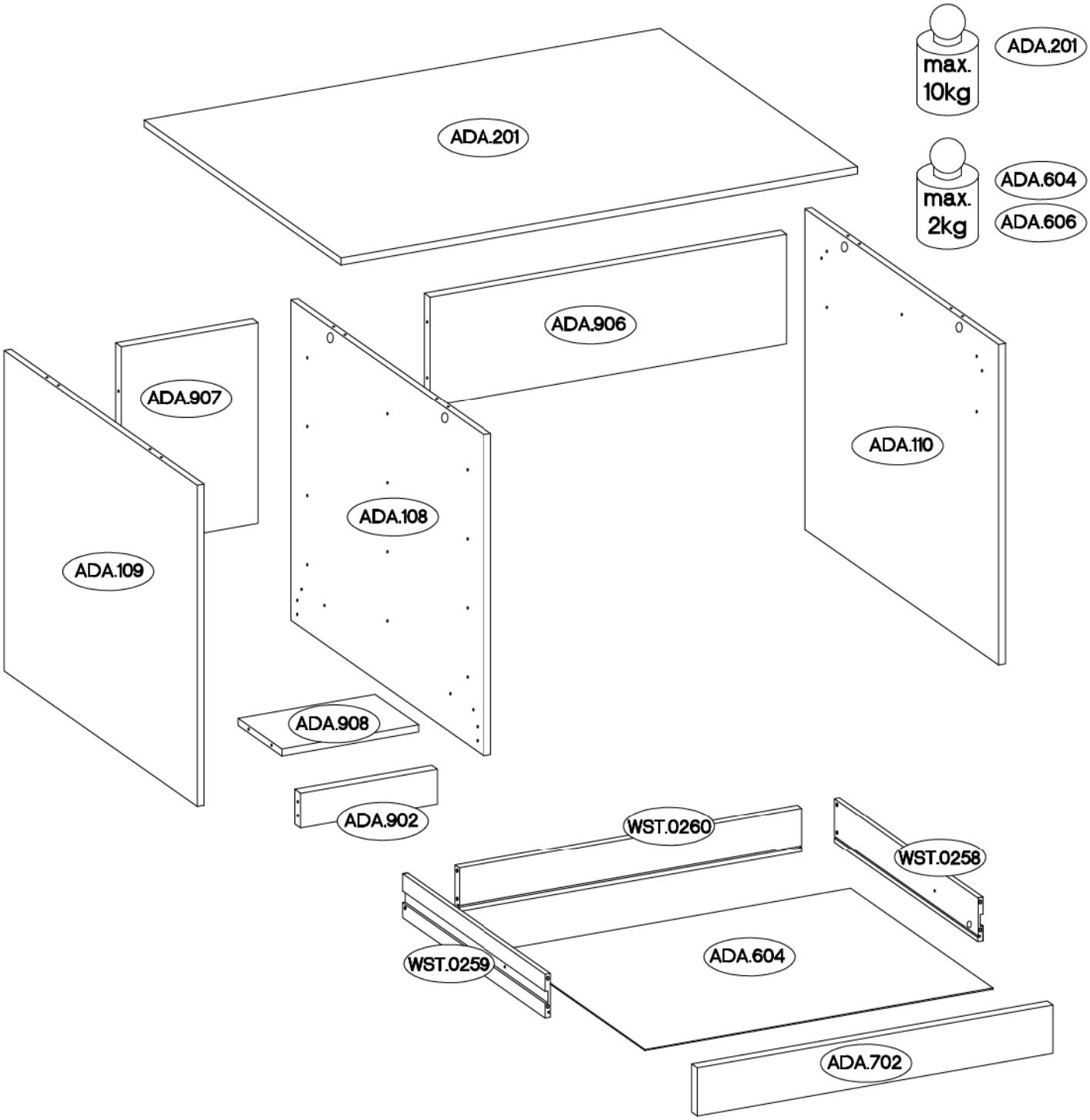

Colli	Ersatzteil Nummer	Dimension
Colli 1/1	ADA.108	734x540x16
	ADA.109	734x540x16
	ADA.110	734x540x16
	ADA.201	1200x550x16
	ADA.606 x4	296x397x2,5
	ADA.604	807x397x2,5
	ADA.705 x4	130x314x16
	ADA.702	110x825x16
	ADA.906	829x250x16
	ADA.907	318x460x16
	ADA.902	318x80x16
	ADA.908	318x122x16
	WST.0258 x5	400x100x12
	WST.0259 x5	400x100x12
	WST.0260	796x100x12
	WST.0265 x4	285x100x12

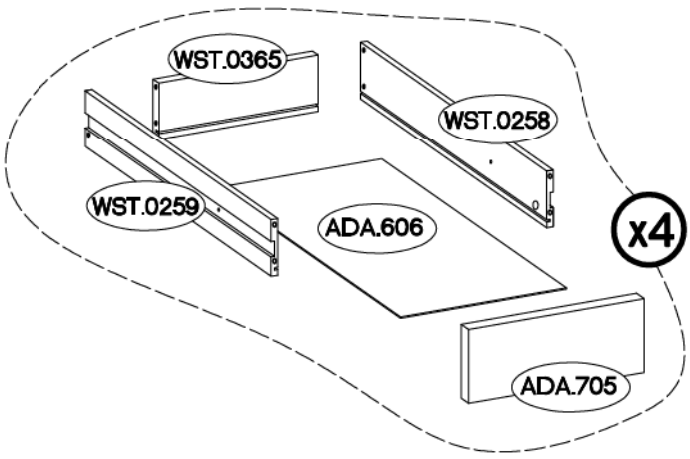

VARIANT L

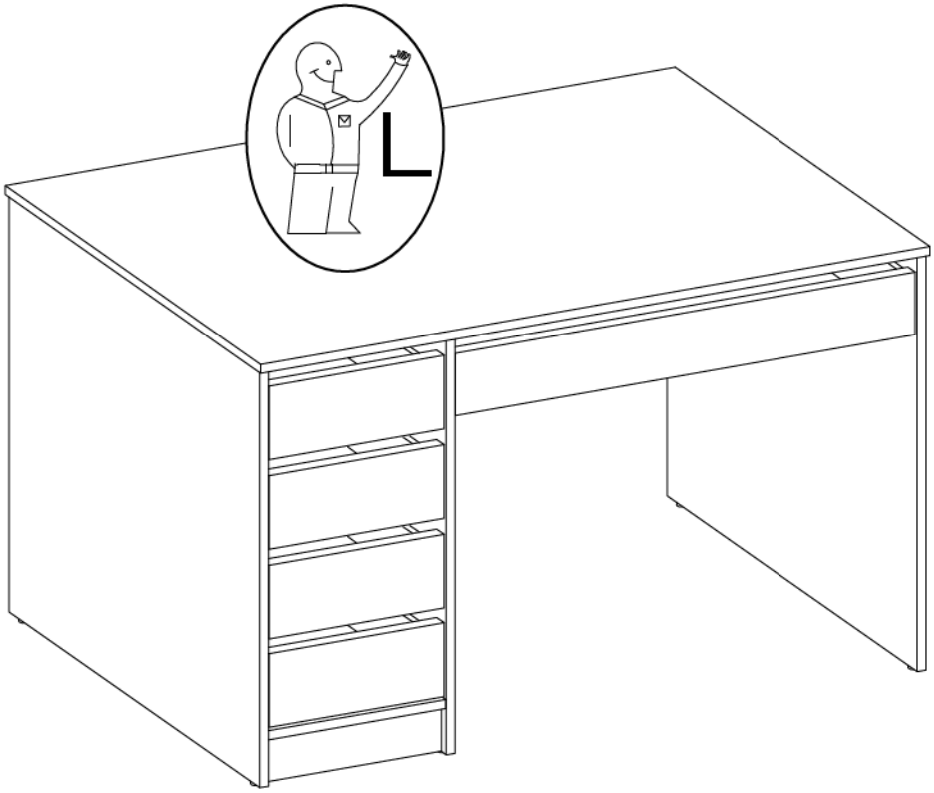

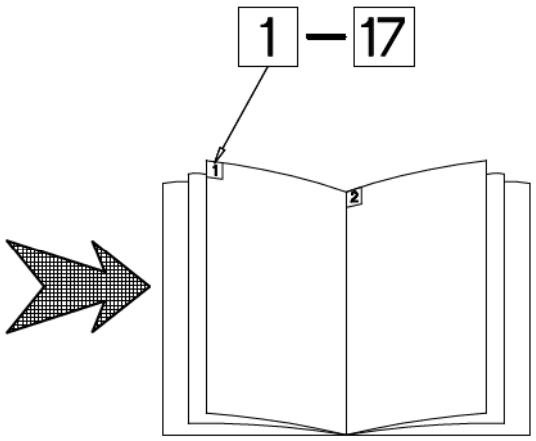

VARIANT R

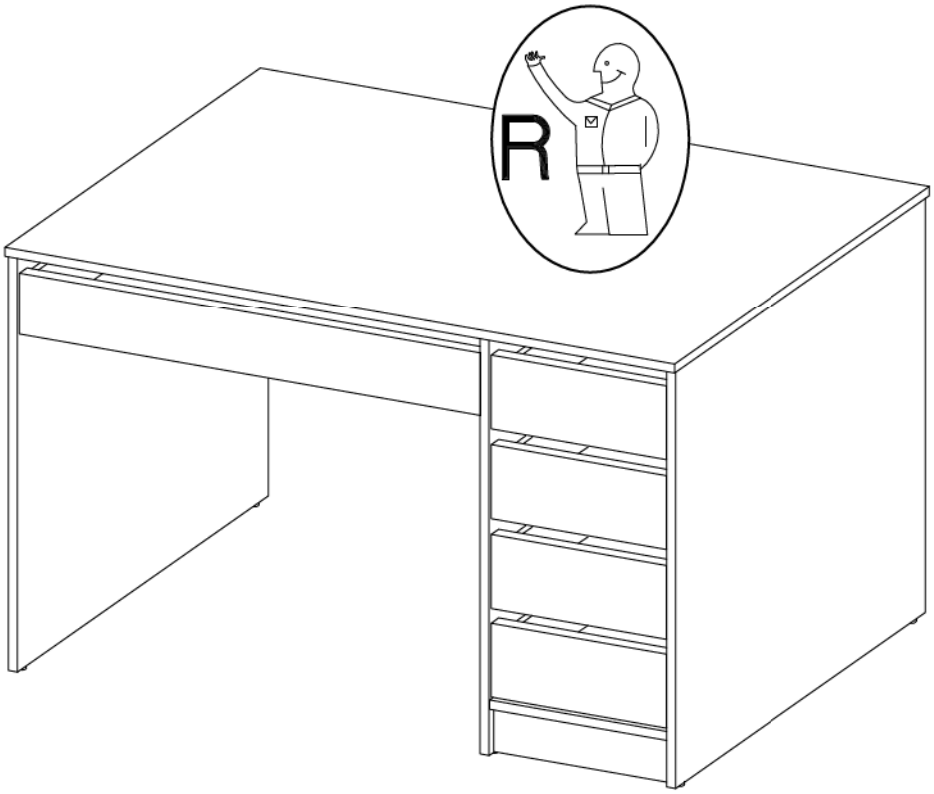

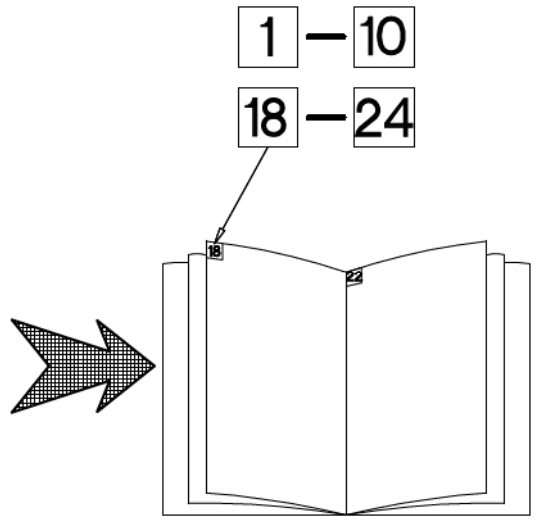

1

ϕ12/10mm	ϕ8x30mm
 C5	 A
2	4

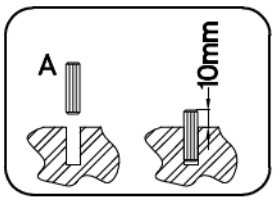

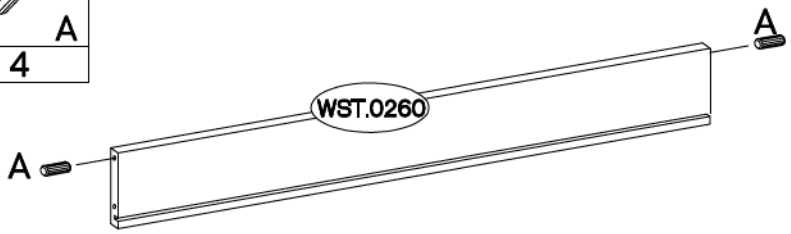

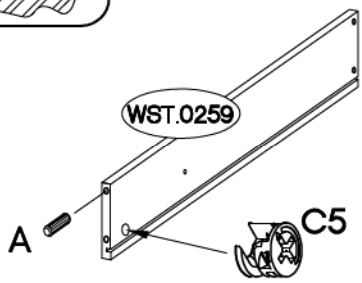

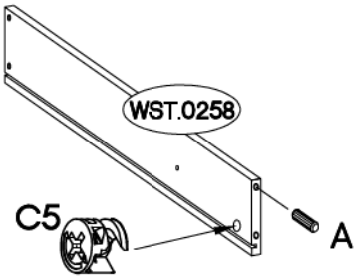

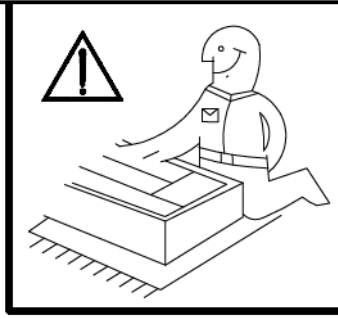

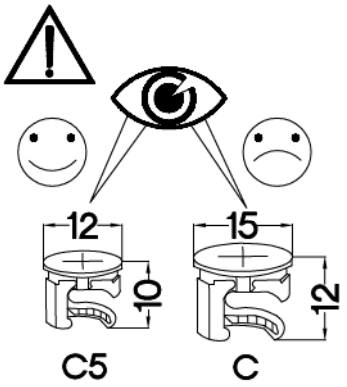

2

ϕ6x42mm
 B2
2

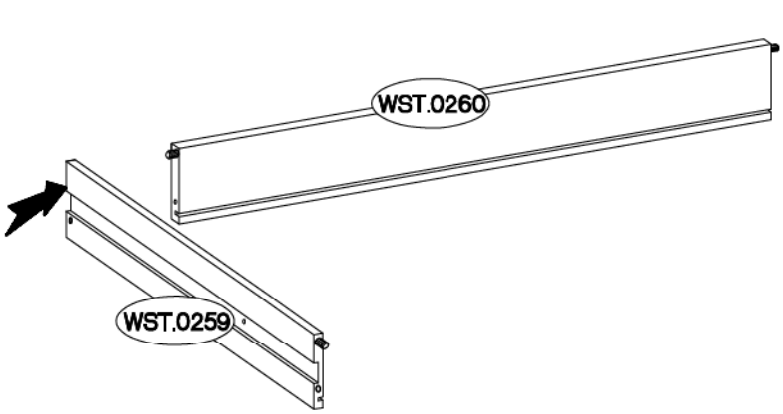

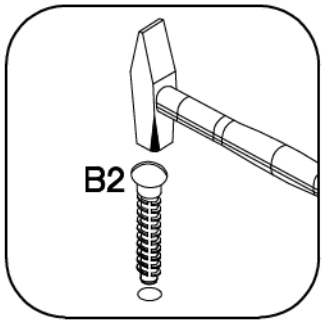

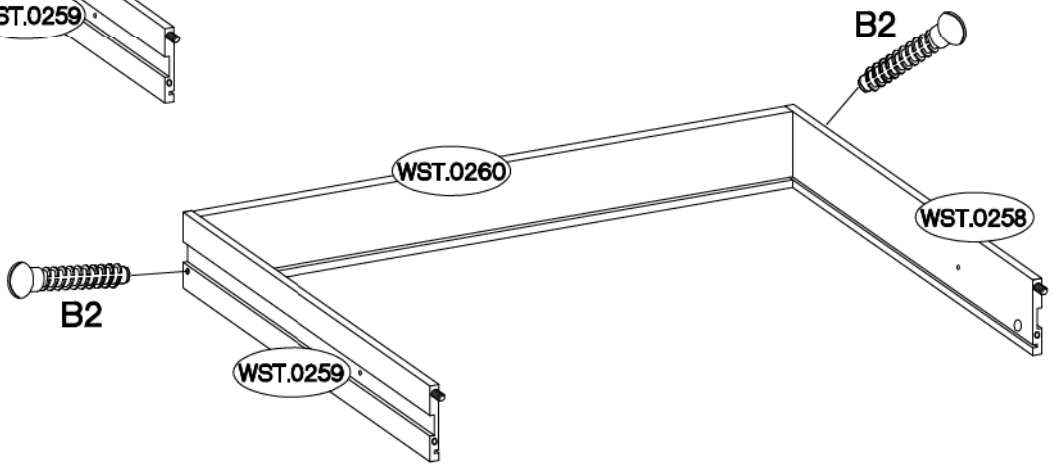

3

L=20/8mm
 D9
2



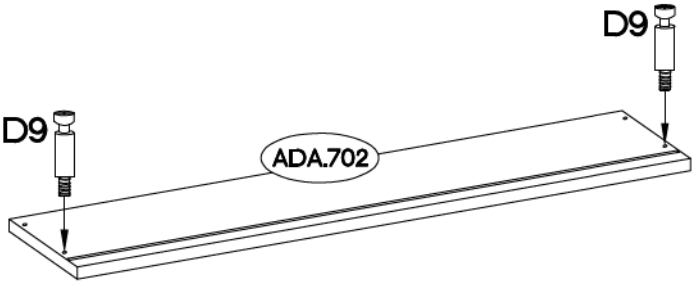

4

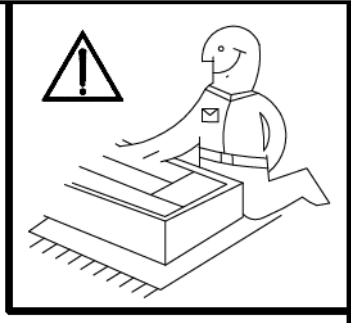

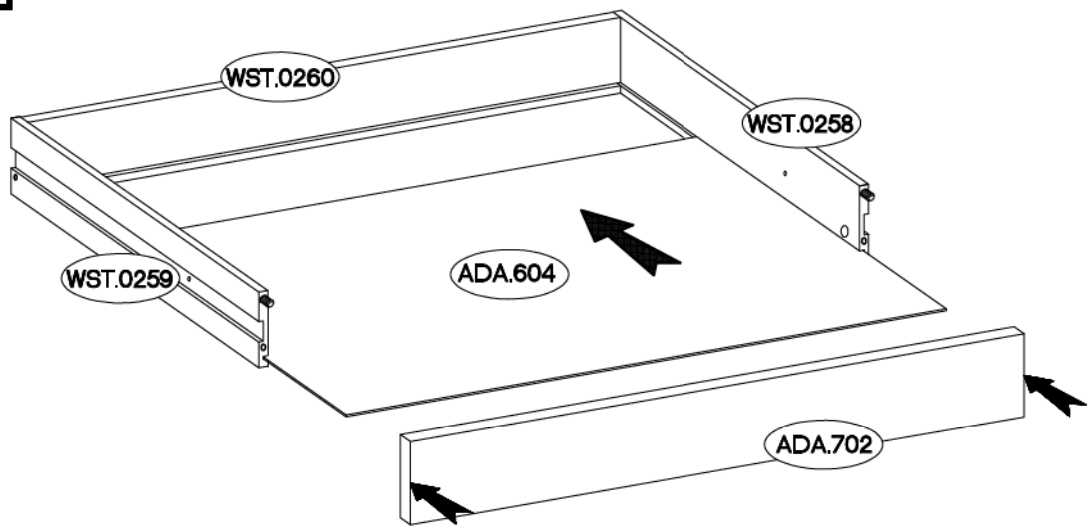
WST.0260
WST.0258
WST.0259
ADA.604
ADA.702

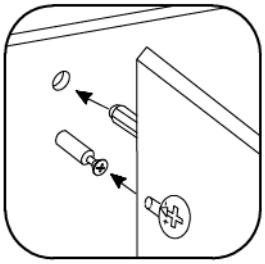

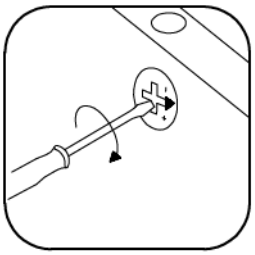

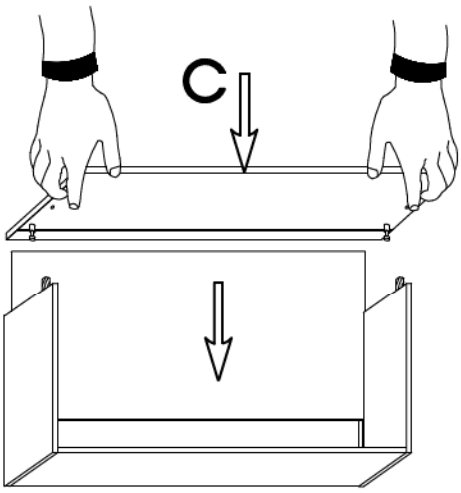
C

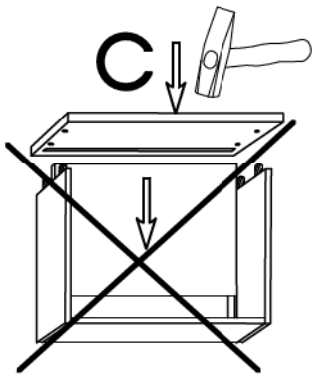
C

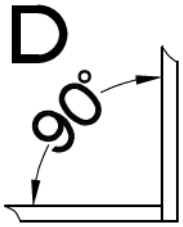
D
90°

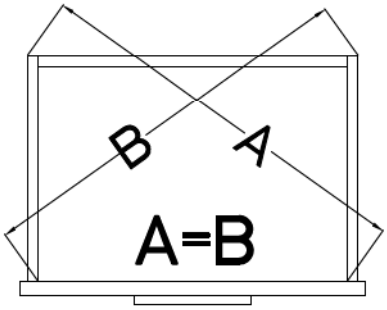
B
A
A=B

5

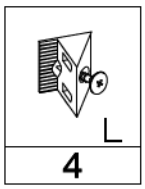
L
4

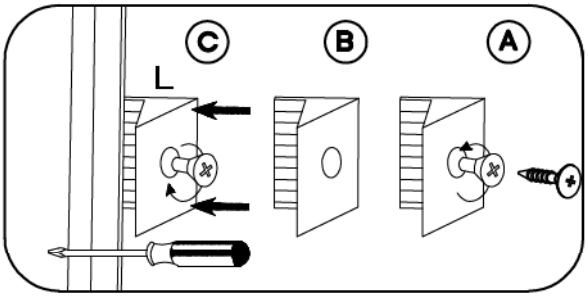
C
B
A
L

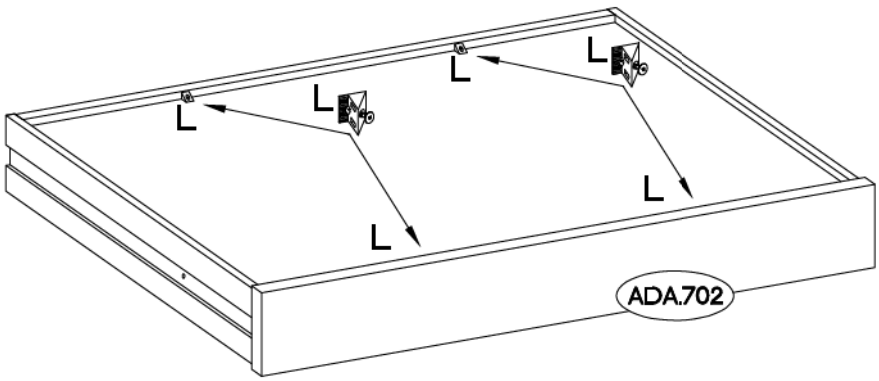
L
L
L
L
L
L
ADA.702

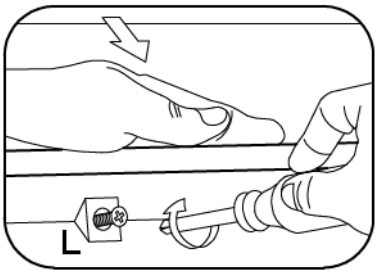
L

6

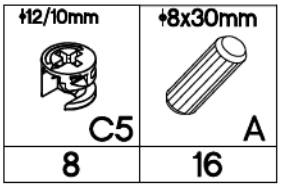

8	16

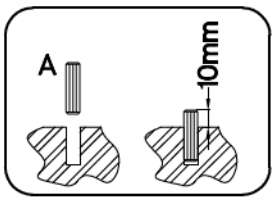

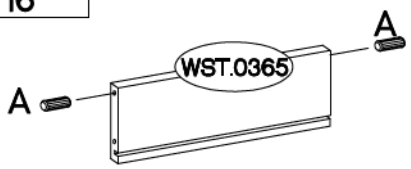

x4

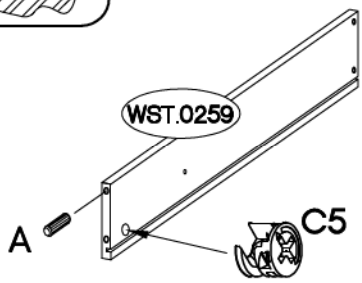

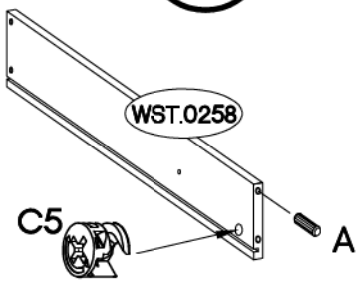

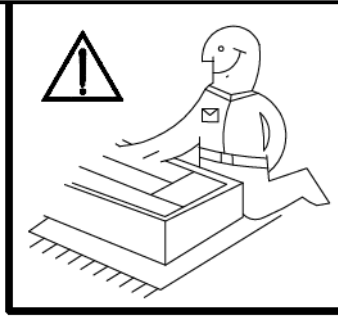

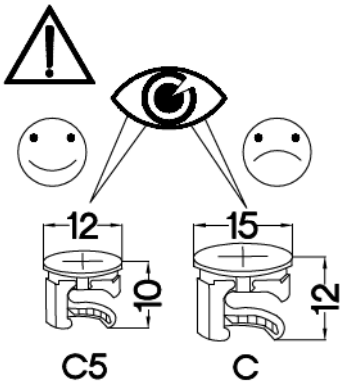

7



8

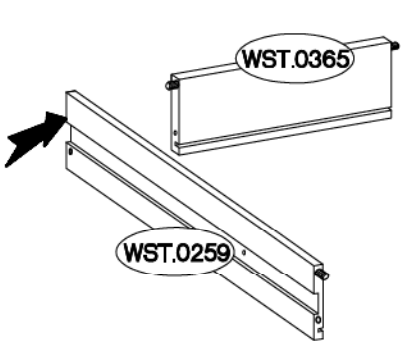



x4

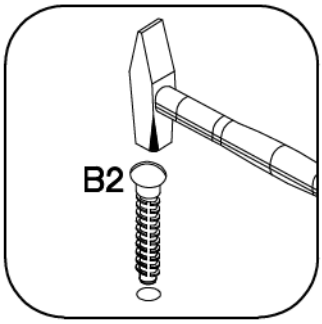

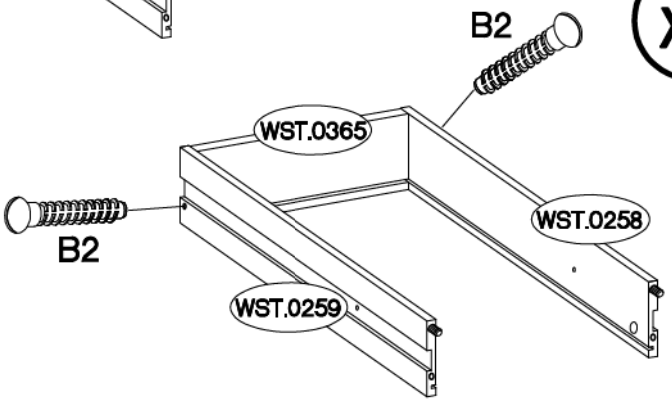

8

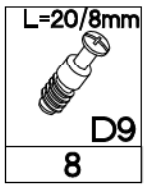

8



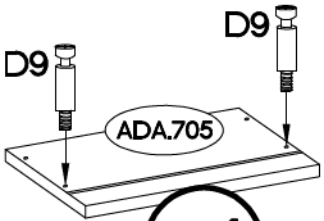

x4

9

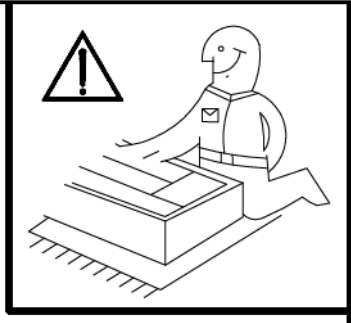

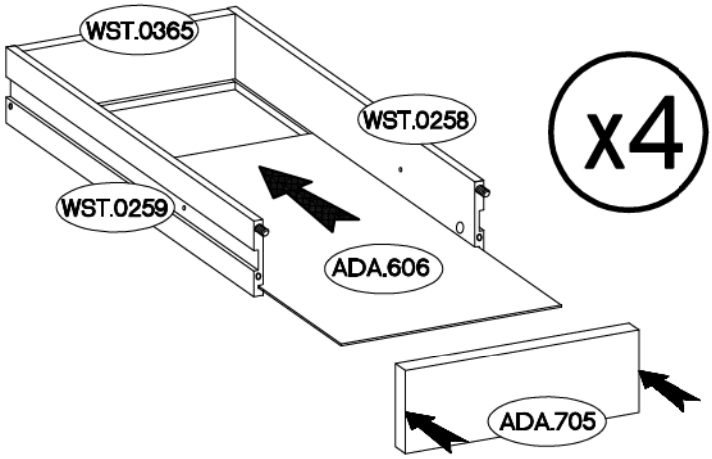
WST.0365
WST.0258
WST.0259
ADA.606
ADA.705

x4

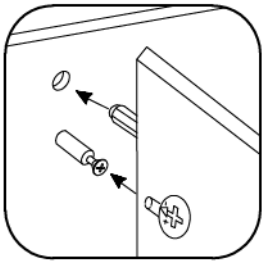

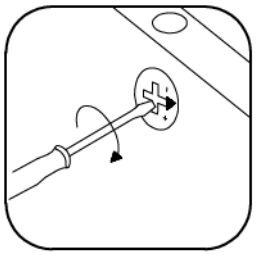

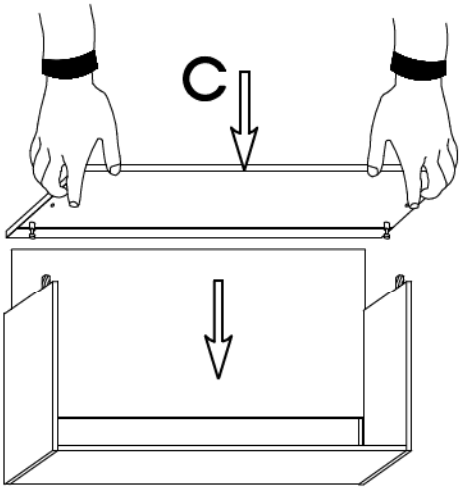
C

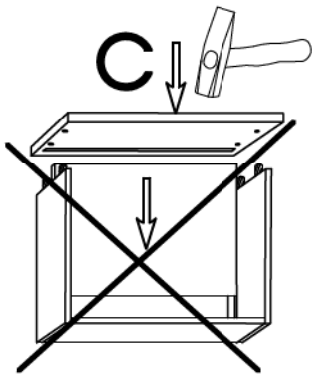
C

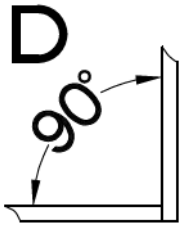
D
90°

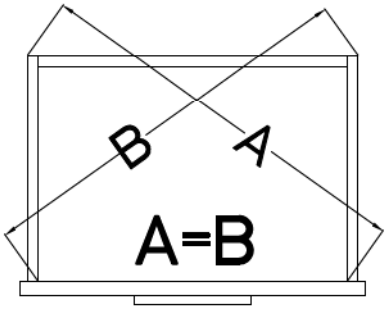
B
A
A=B

10

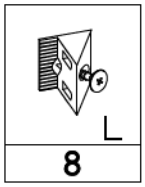
L
8

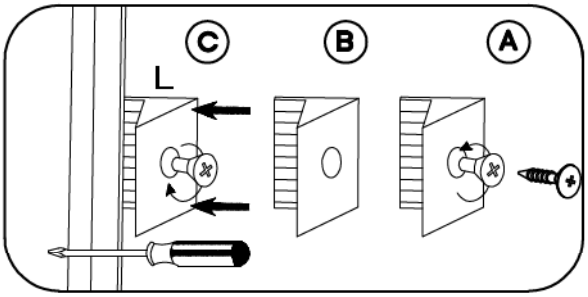
C
B
A
L

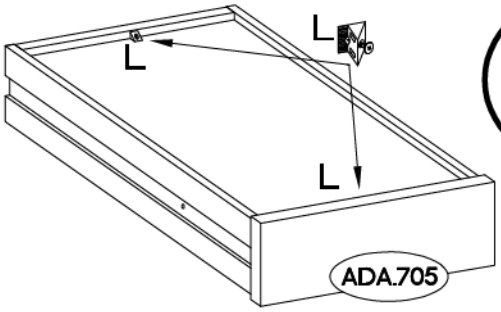
L
L
L
ADA.705

x4

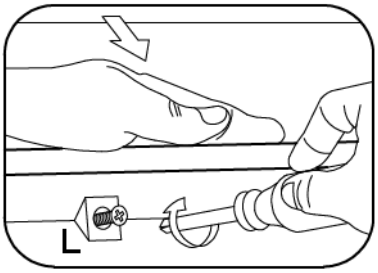
L

11

⌀8x30mm	⌀15/12mm	L=20/8mm	⌀15x5mm	27/310mm	⌀6,3x13mm
A	C	D9	F4	I4	M2
6	6	10	6	5	20

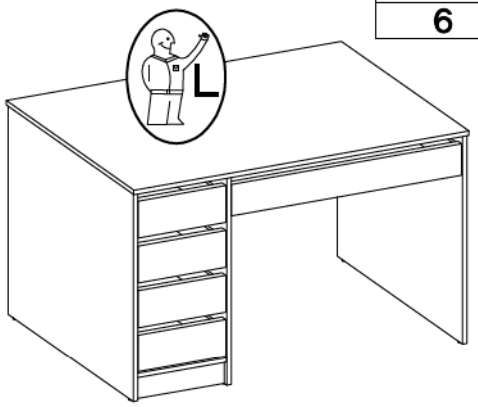

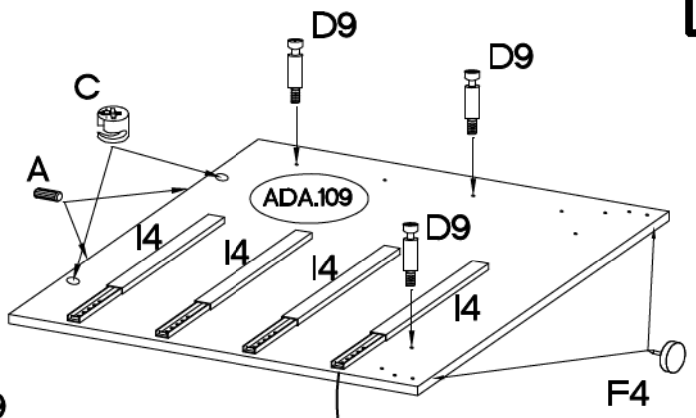

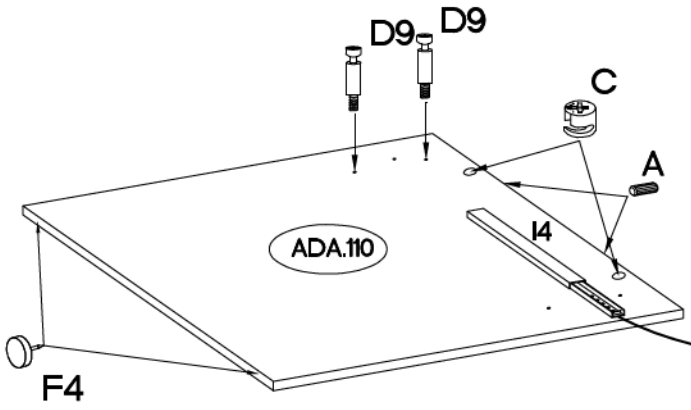

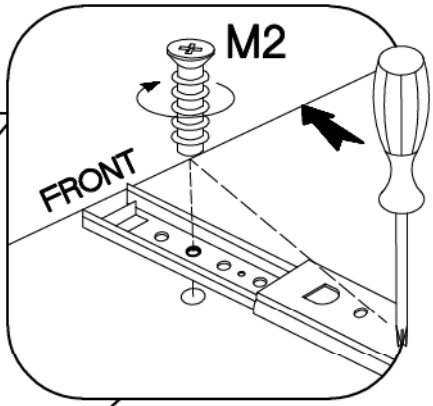

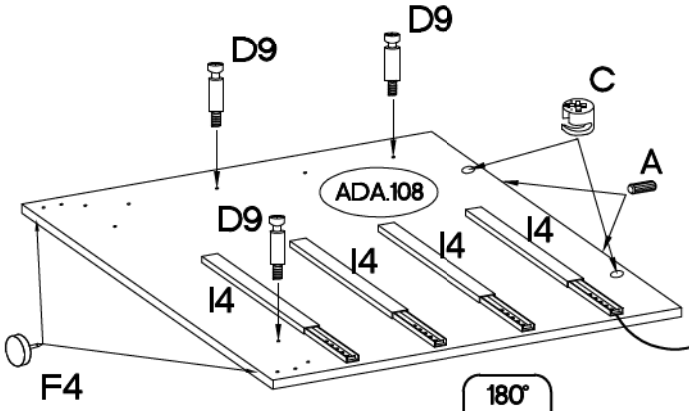



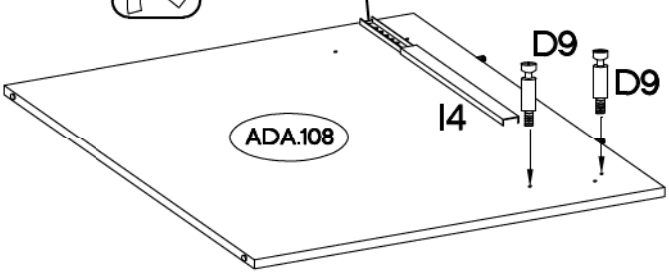

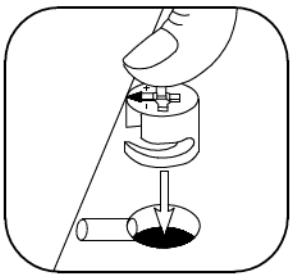

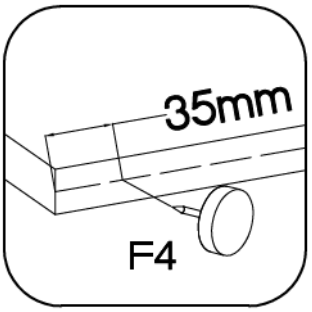

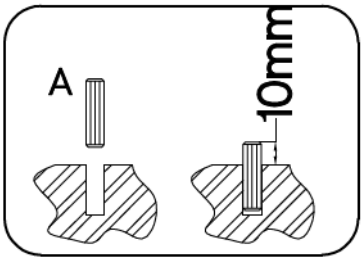

12

ϕ8x30mm	ϕ15/12mm	L=20/8mm
 A	 C	 D9
6	10	6

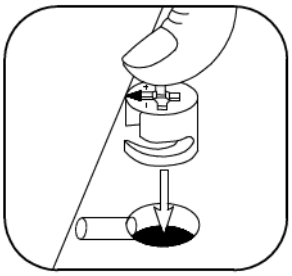

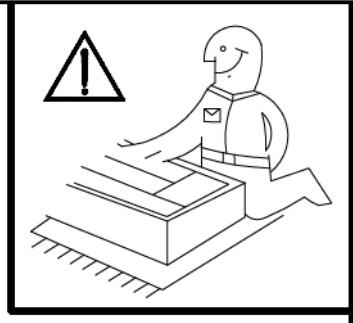

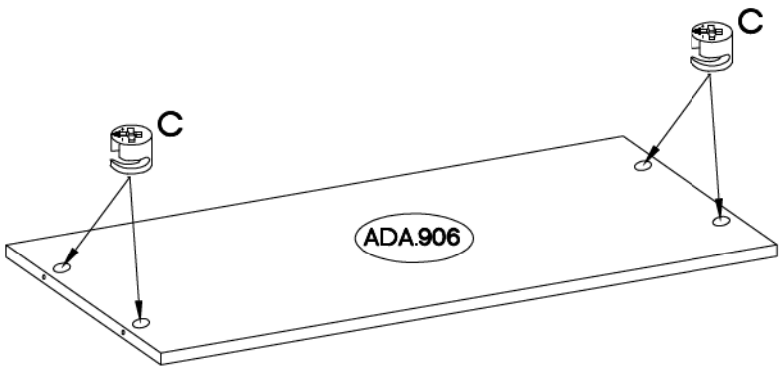



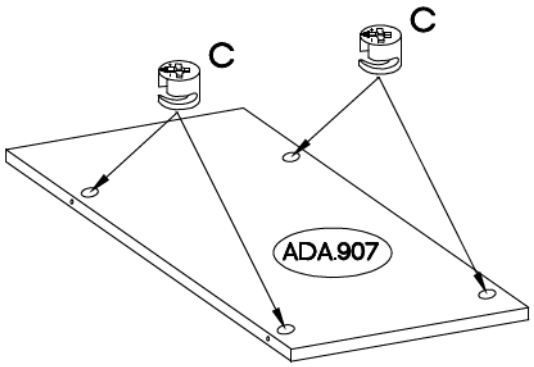

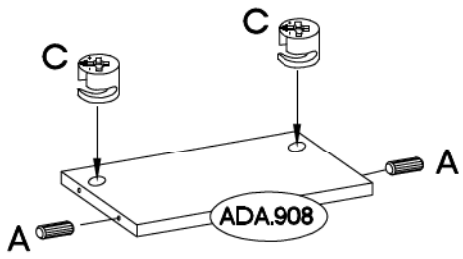

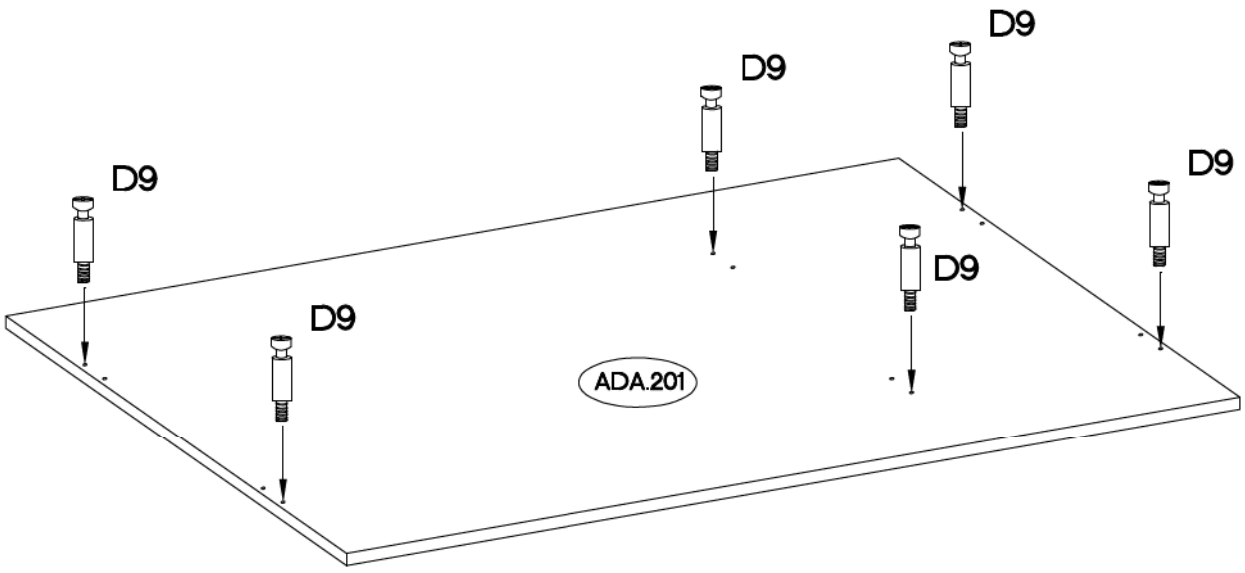

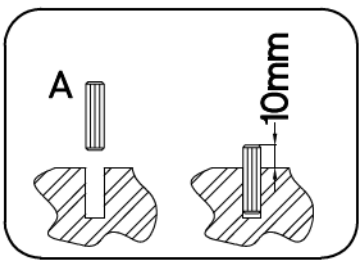



13

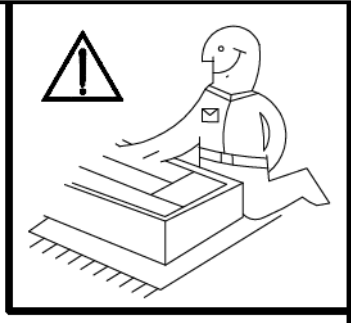

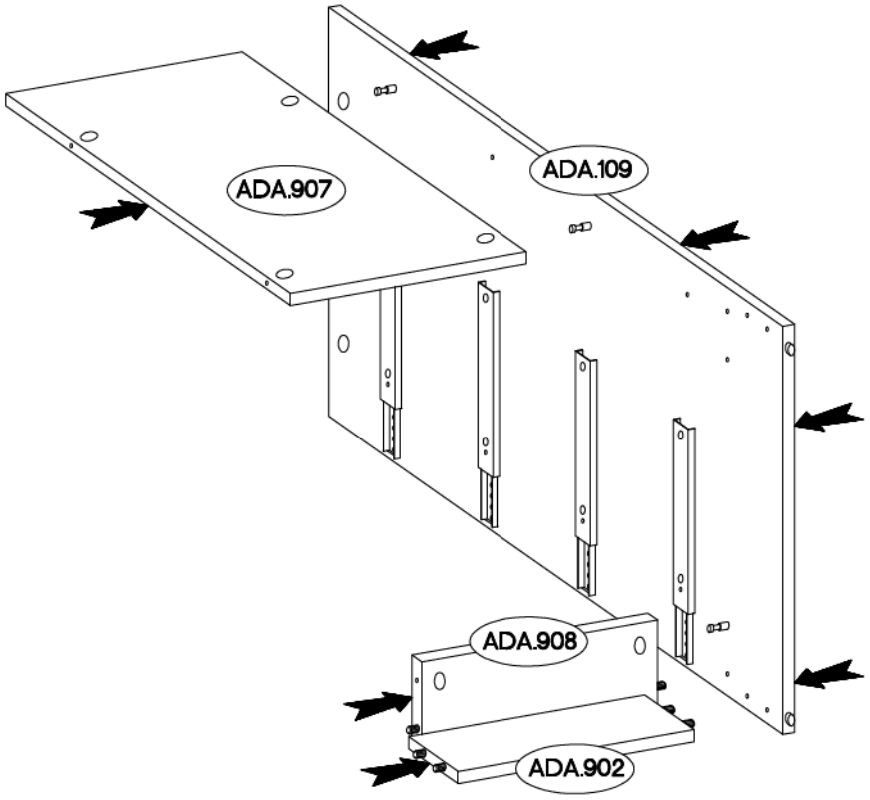
ADA.907
ADA.109
ADA.908
ADA.902

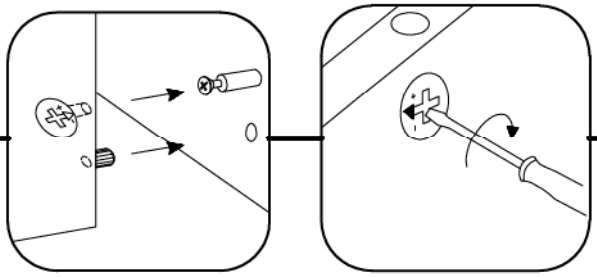

14

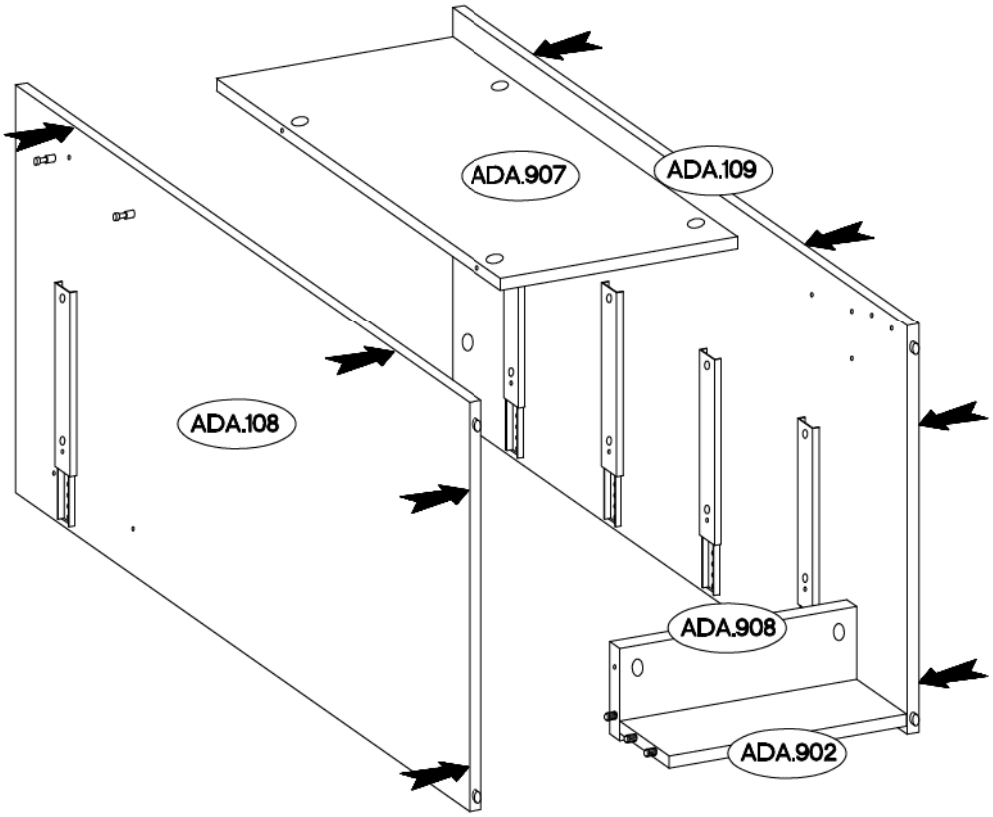
ADA.907
ADA.109
ADA.108
ADA.908
ADA.902

15

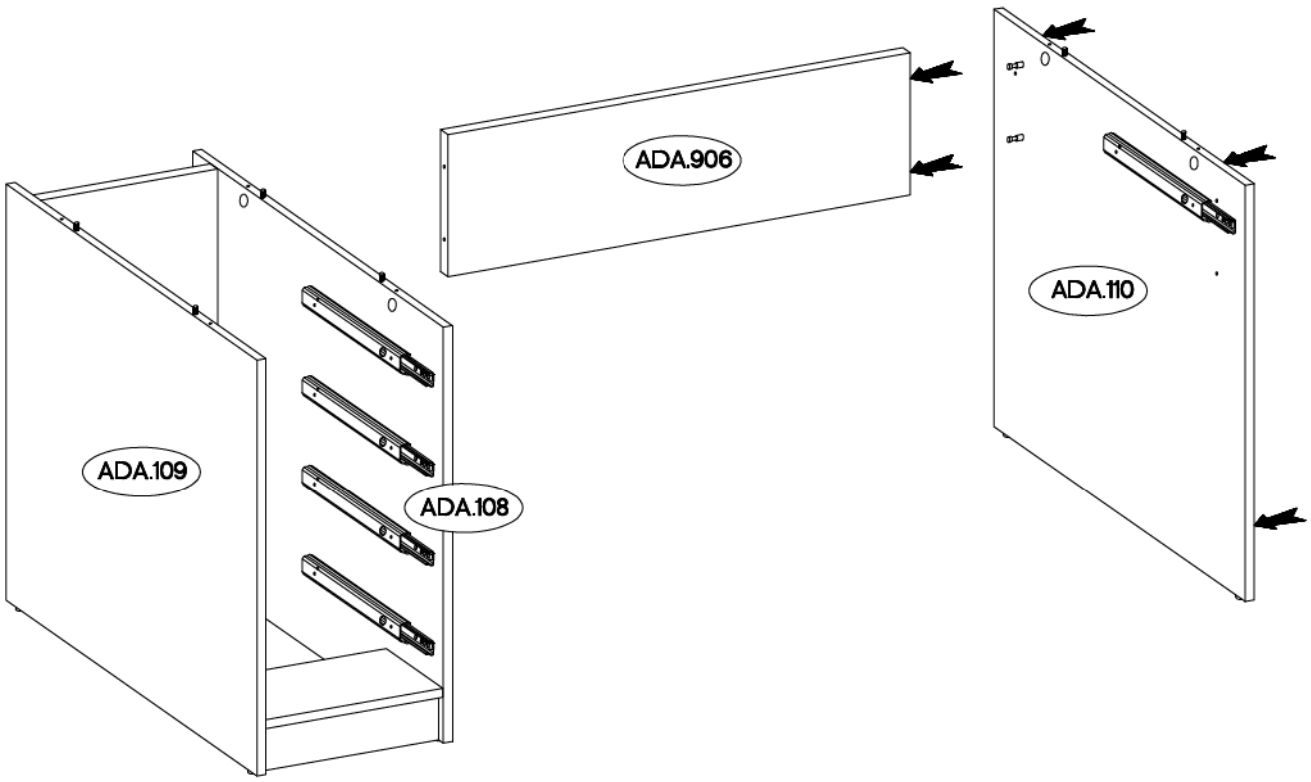
ADA.906
ADA.110
ADA.109
ADA.108

16

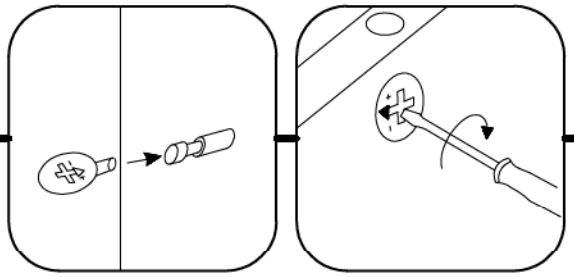

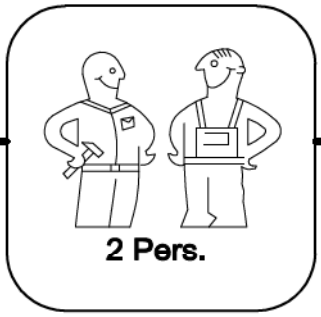
2 Pers.

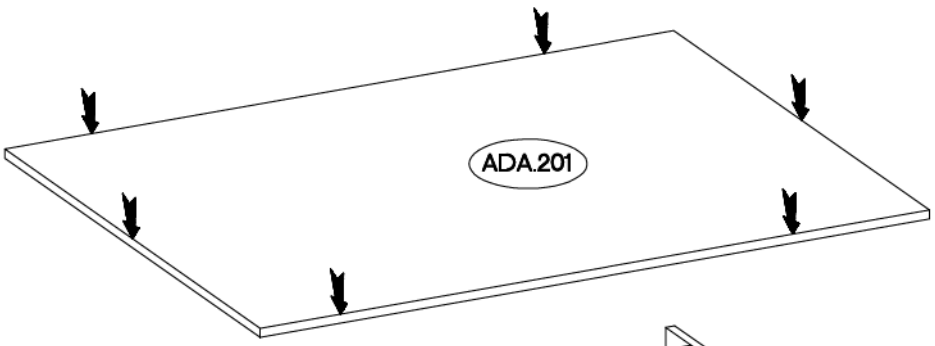
ADA.201

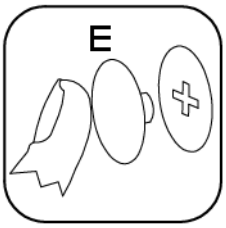
E

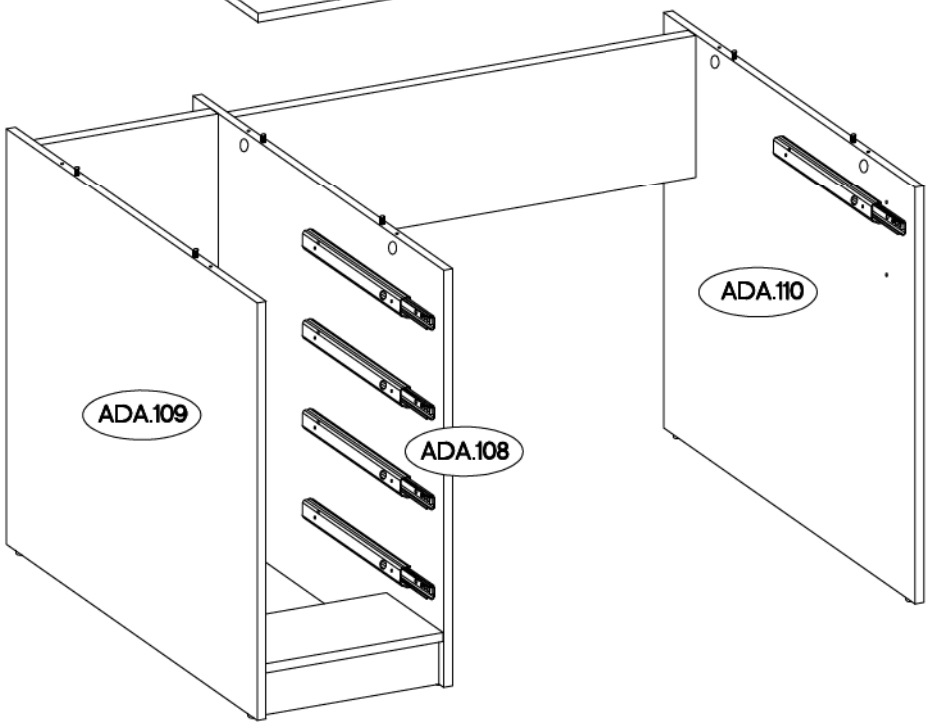
ADA.110
ADA.109
ADA.108

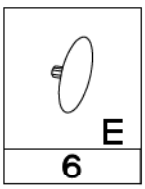
E
6

17

M4x9mm	⌀5
 U1	 E2
10	2

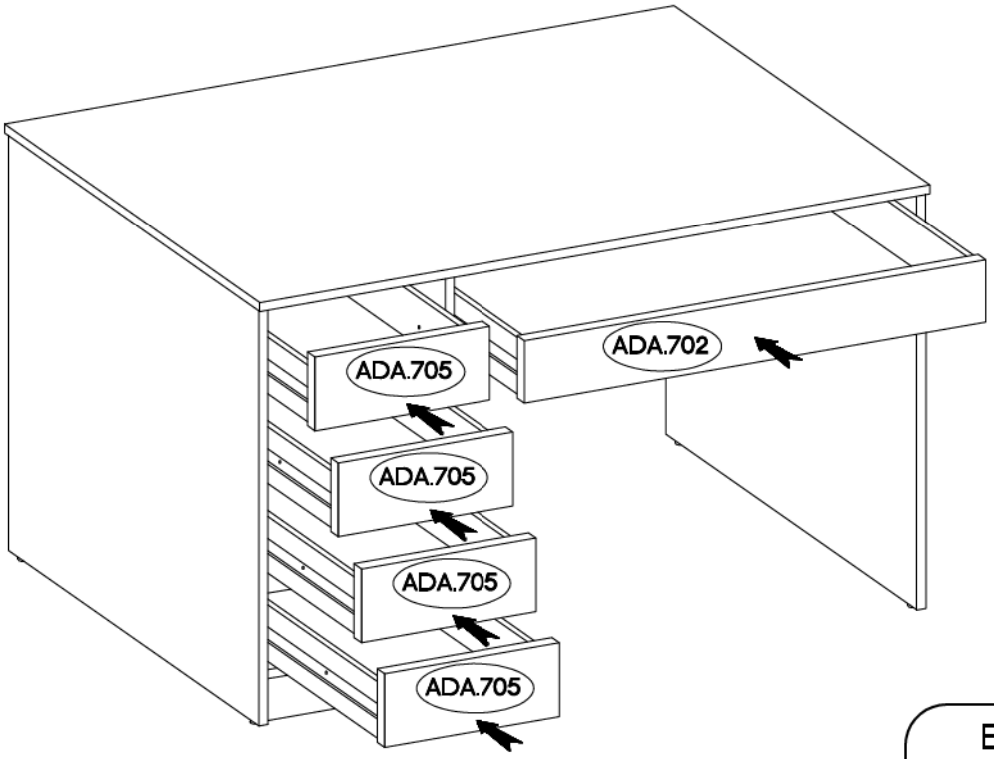

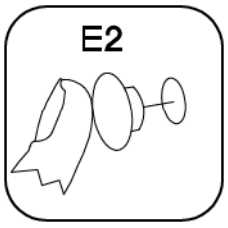

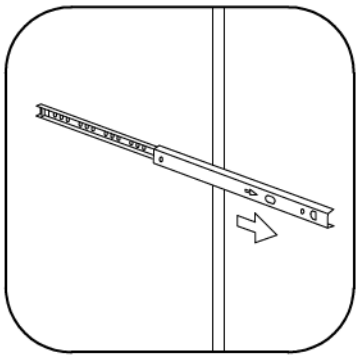

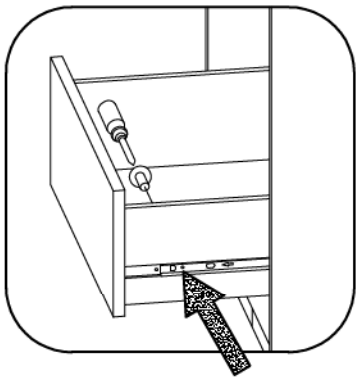



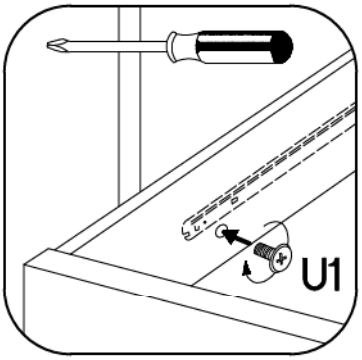

VARIANT HIGH GLOSS

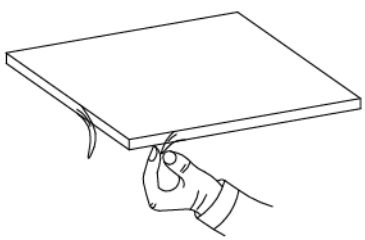







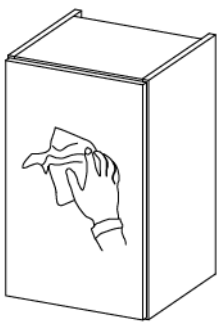

18

ϕ8x30mm A	ϕ15/12mm C	L=20/8mm D9	ϕ15x5mm F4	27/310mm I4	ϕ6,3x13mm M2
6	6	10	6	5	20

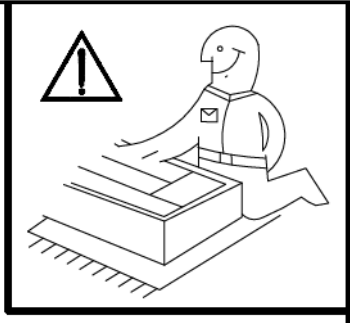

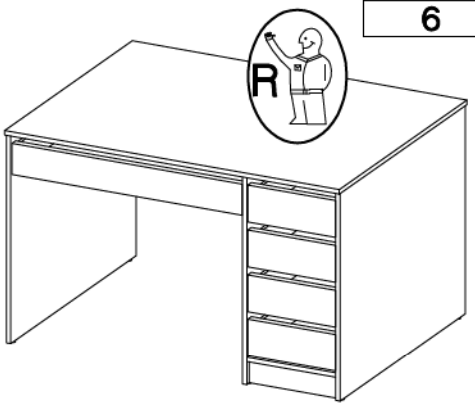

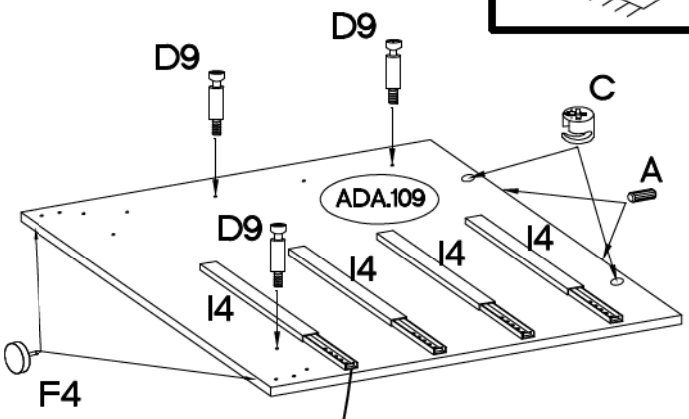

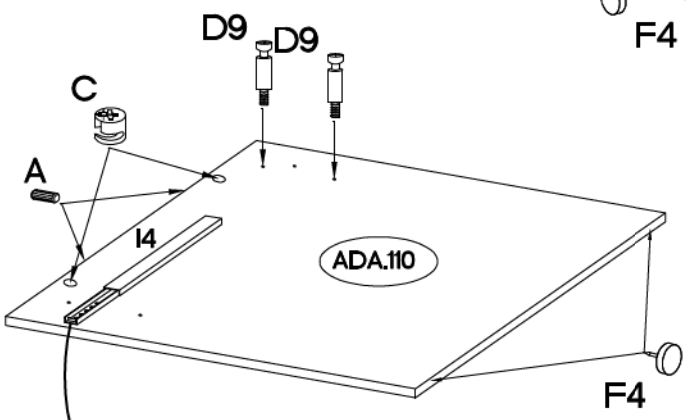

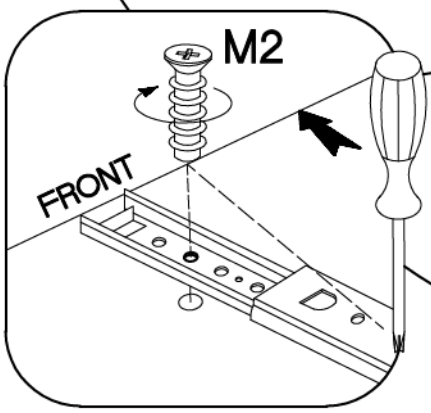

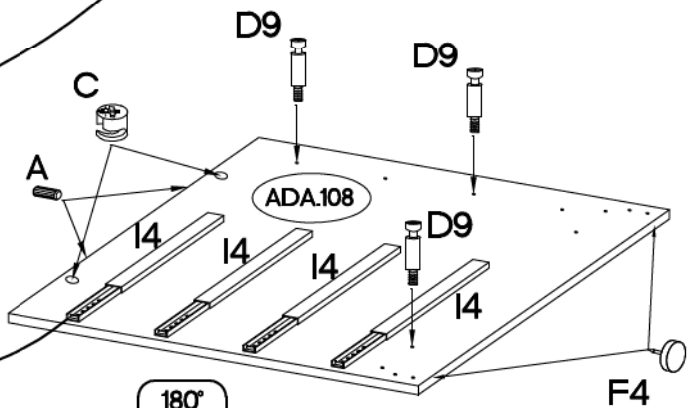



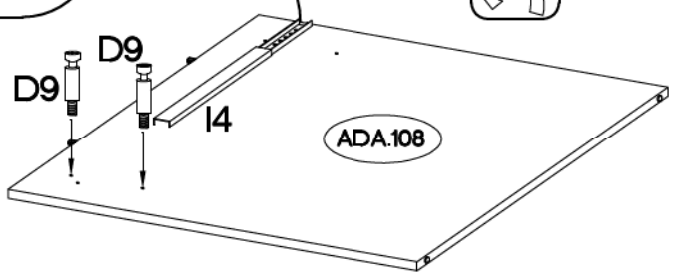

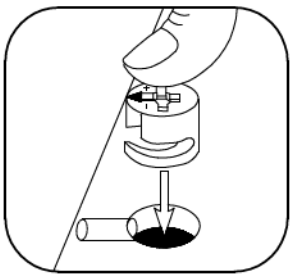

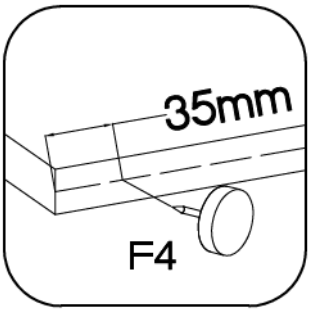

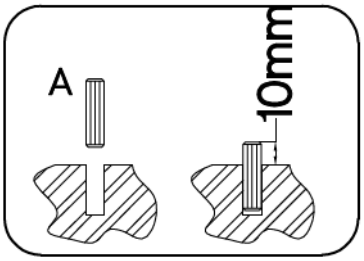

19

⌀8x30mm	⌀15/12mm	L=20/8mm
 A	 C	 D9
6	10	6

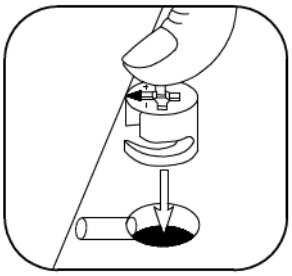

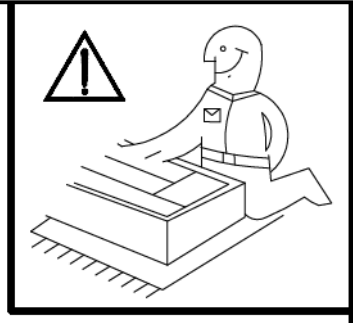

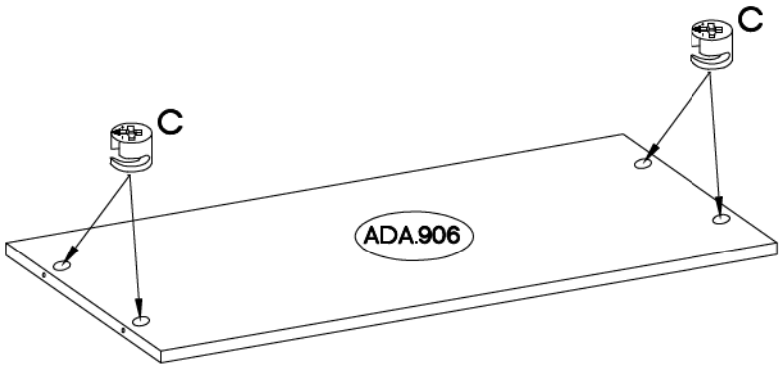



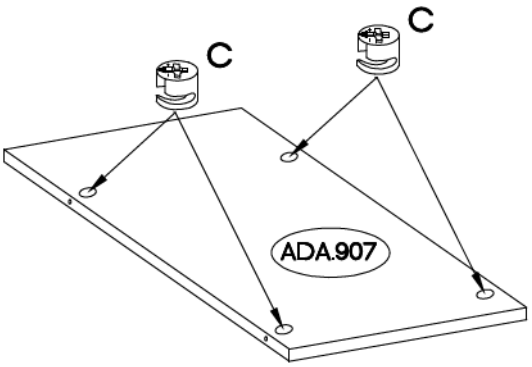

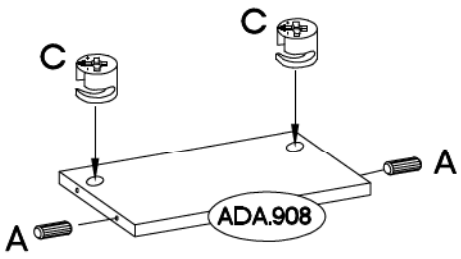

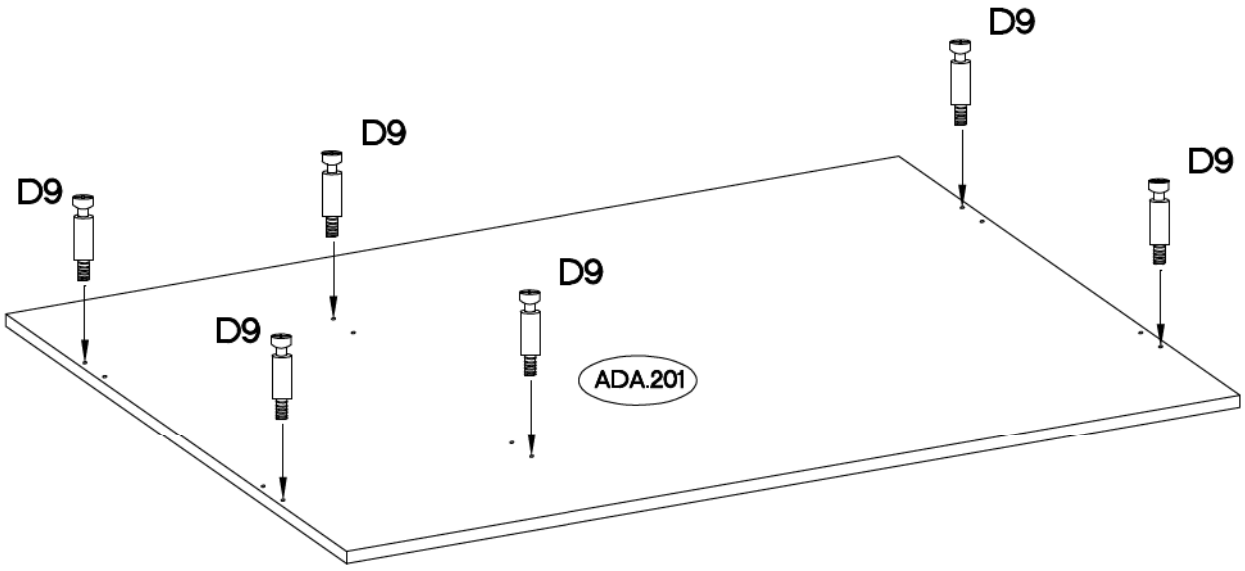

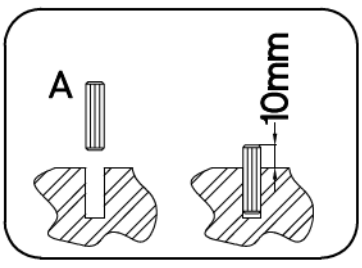

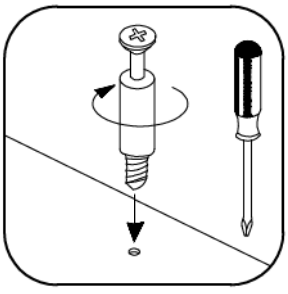





20

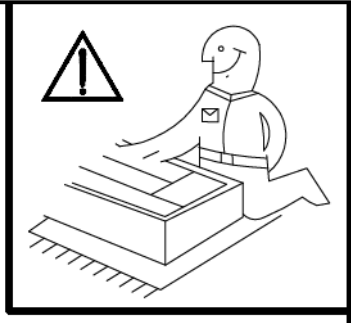

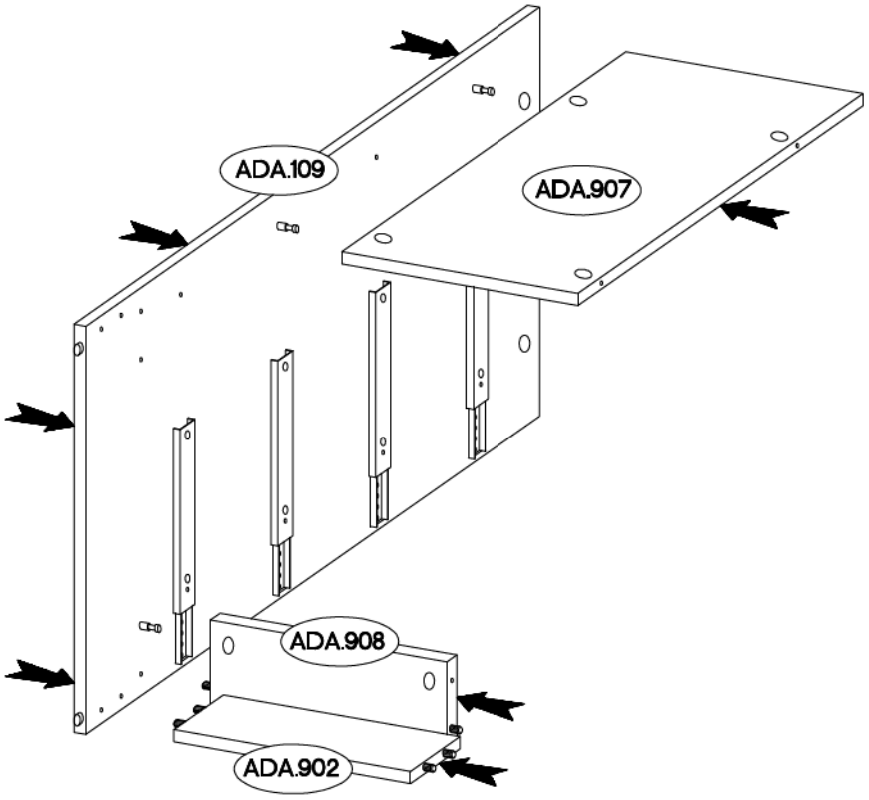
ADA.109
ADA.907
ADA.908
ADA.902

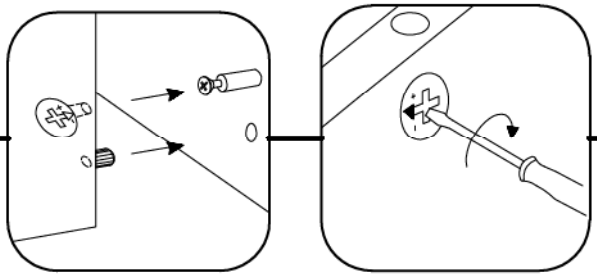

21

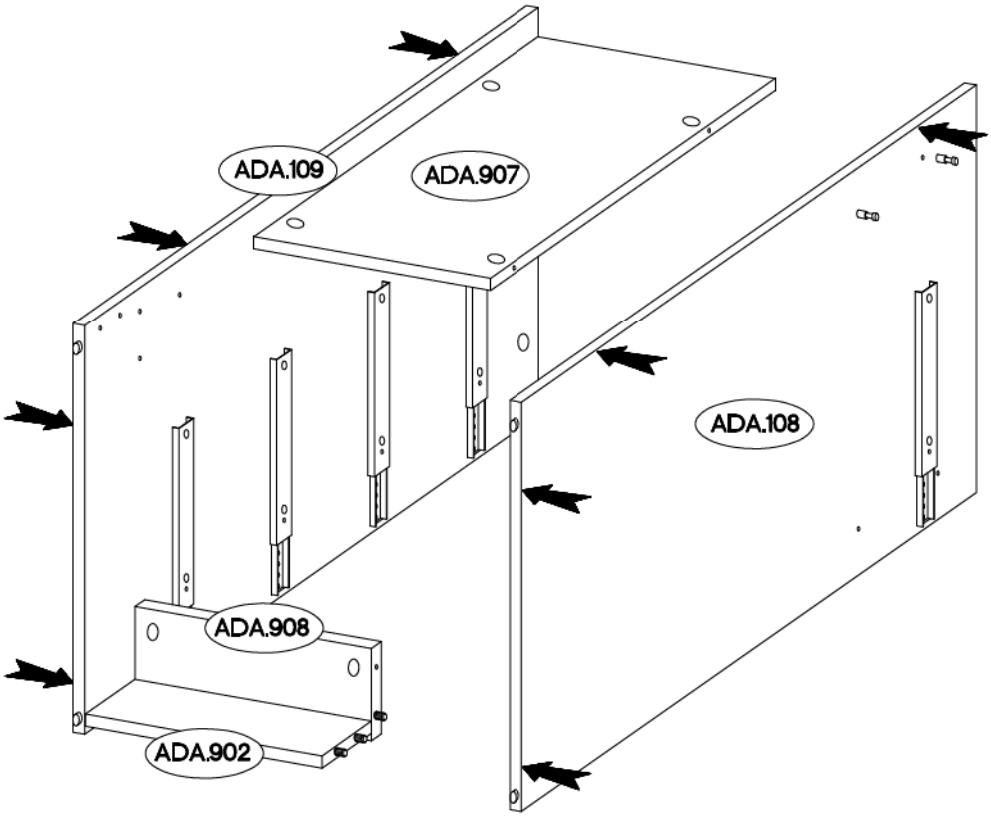
ADA.109
ADA.907
ADA.108
ADA.908
ADA.902

22

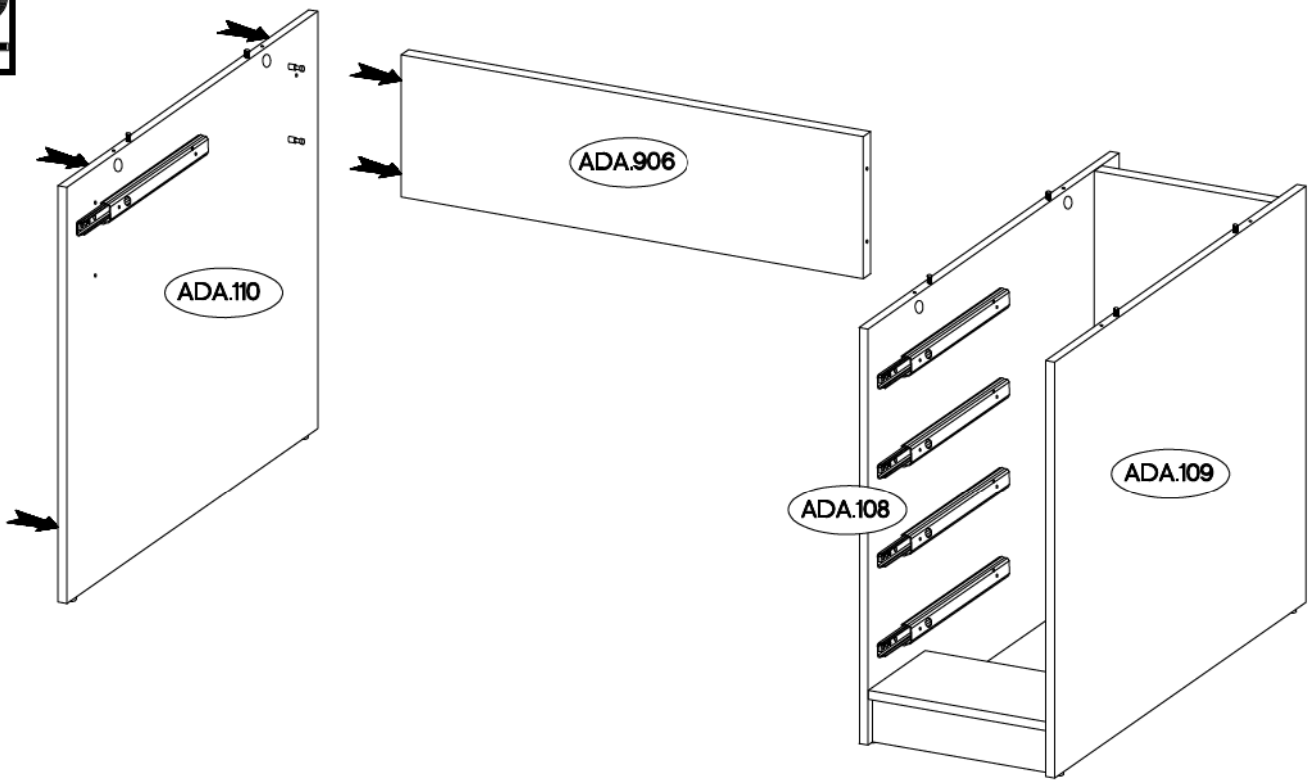
ADA.906
ADA.110
ADA.108
ADA.109

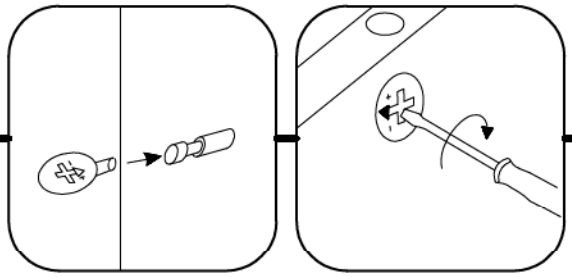

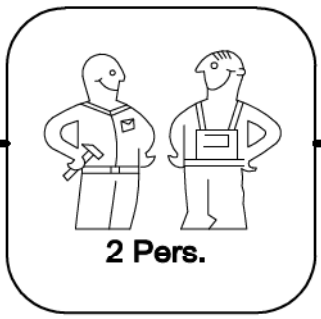
2 Pers.

23

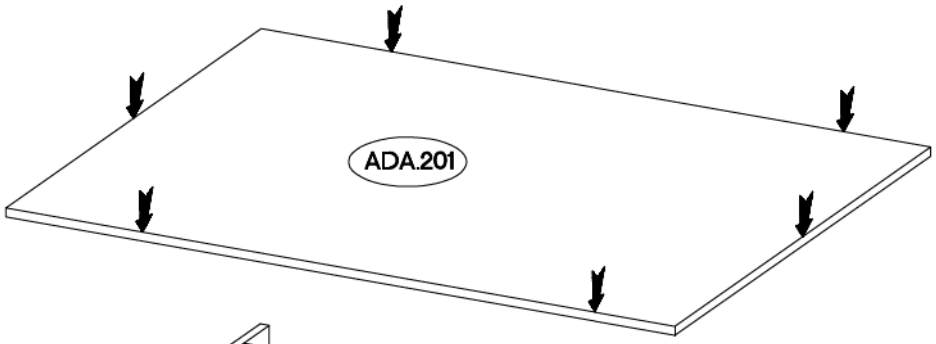
ADA.201

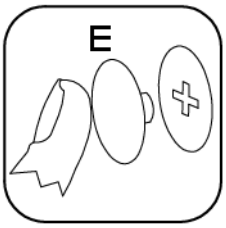
E

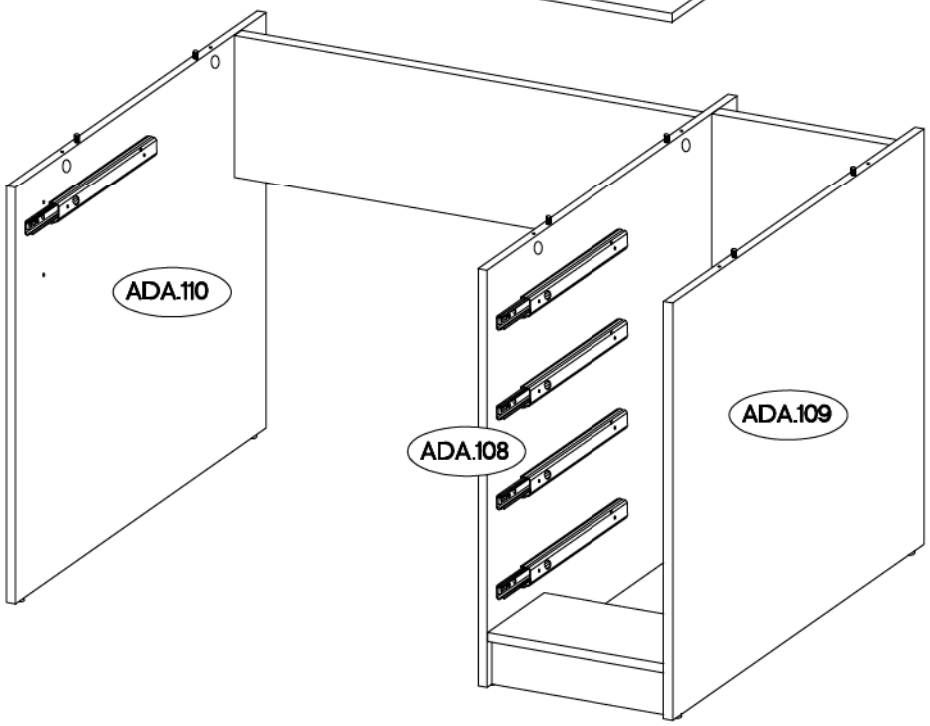
ADA.110
ADA.108
ADA.109

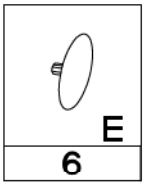
E
6

24

M4x9mm U1	⌀5 E2
10	2

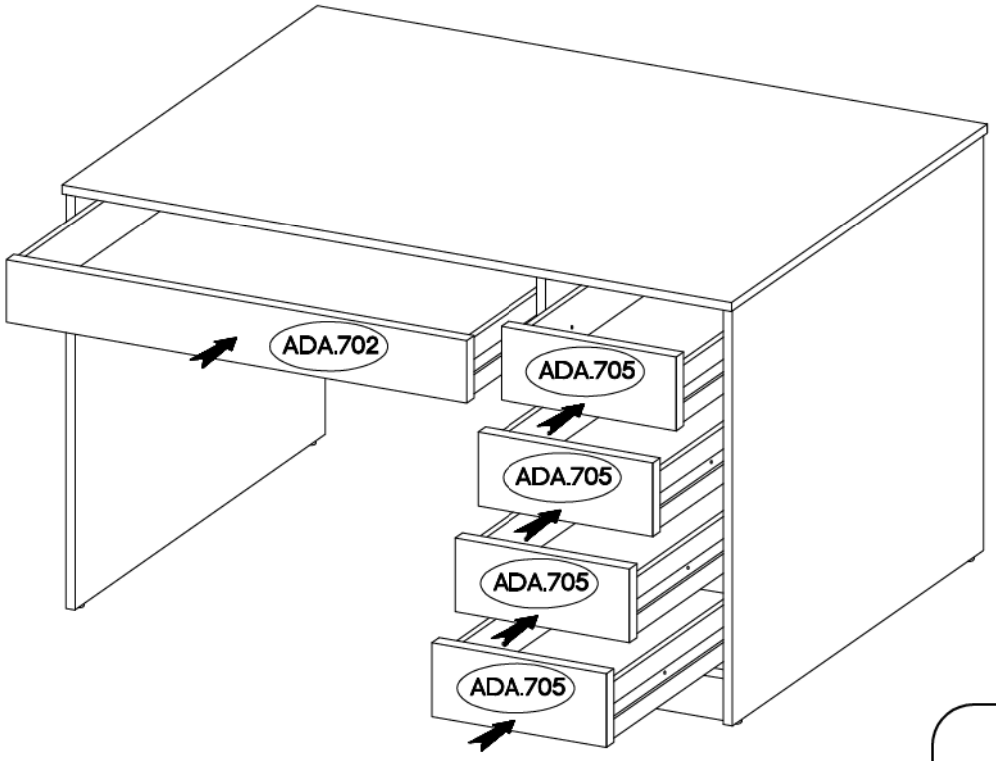

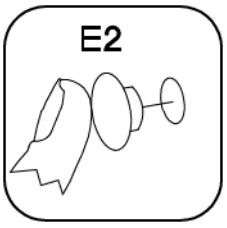

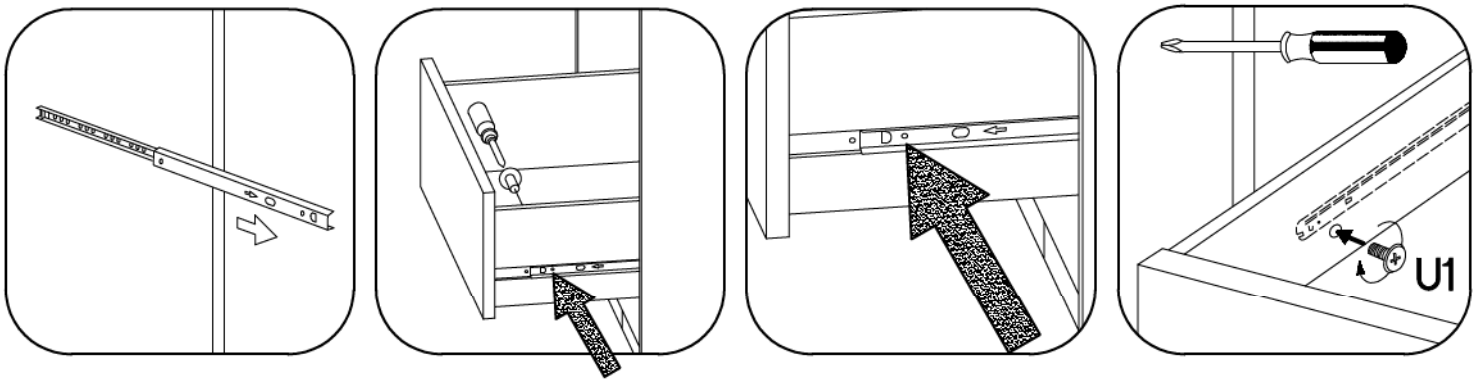

VARIANT HIGH GLOSS

