WYSPA KUCHENNA
CERONIS 2 LEWY

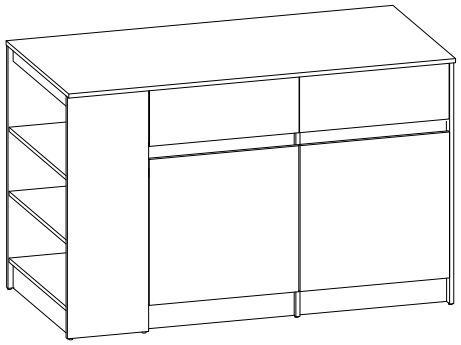

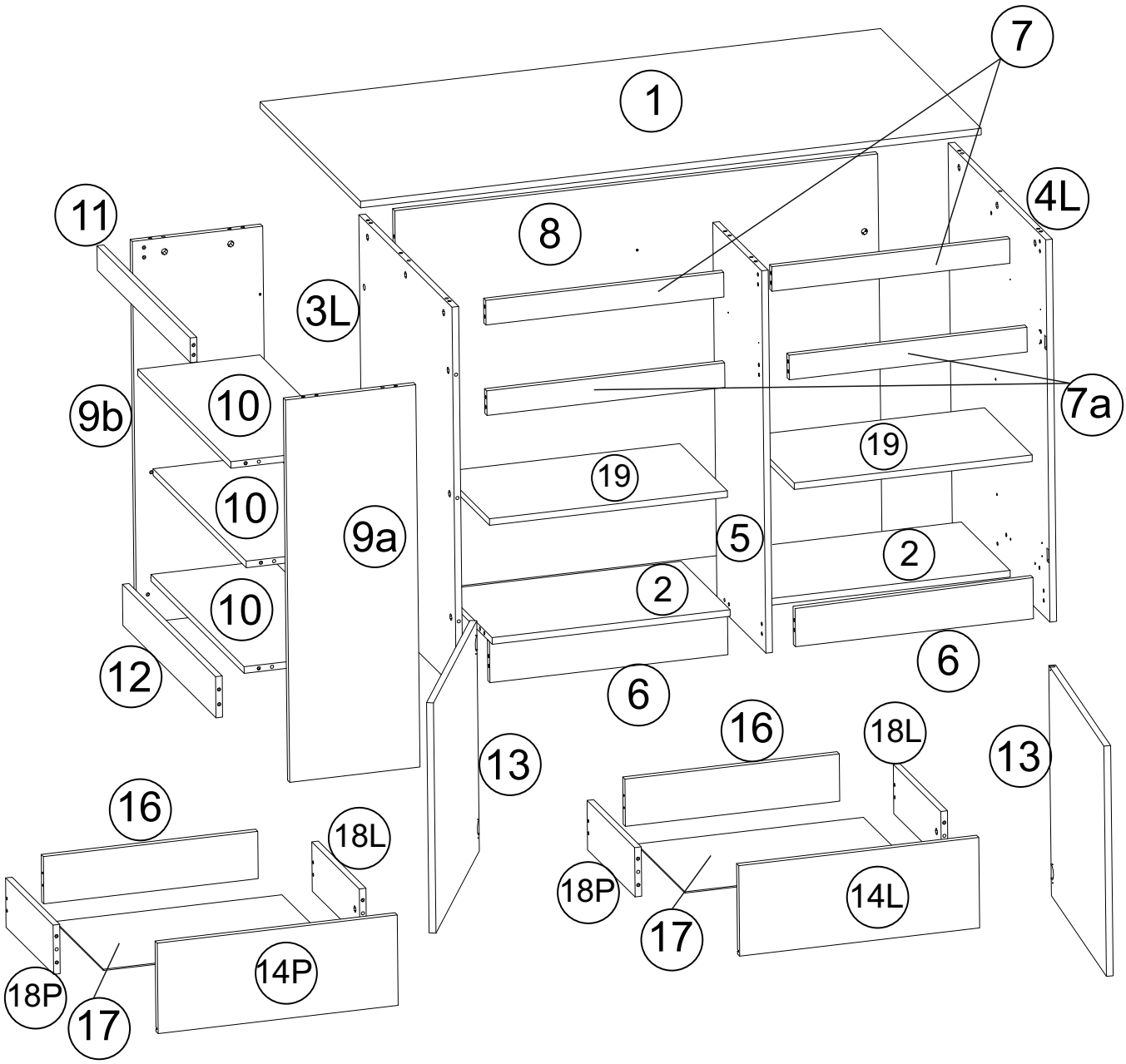

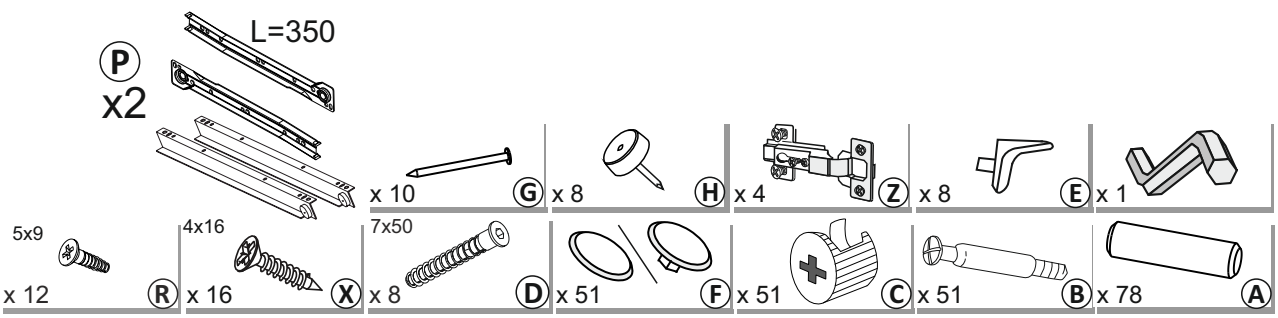

1

x 12 A

3x



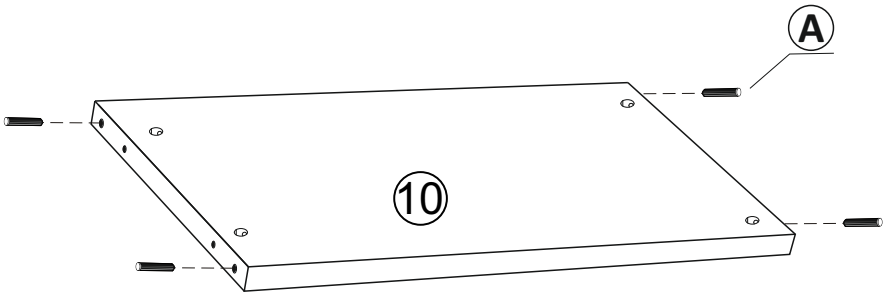

2

x 18 B x 4 A x 2 H

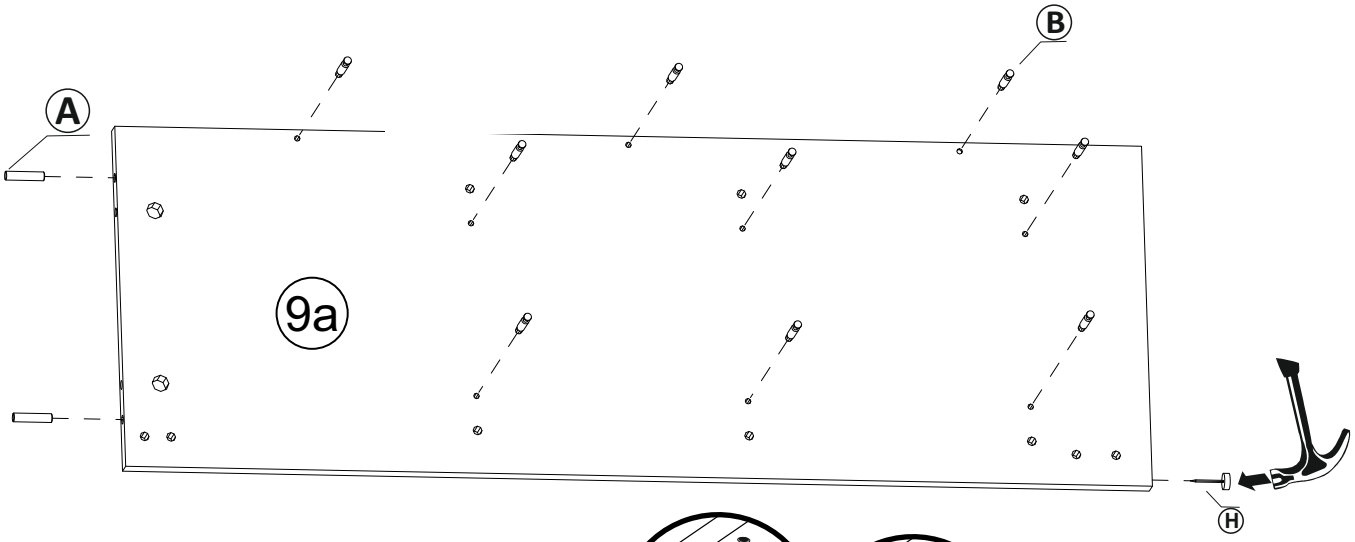



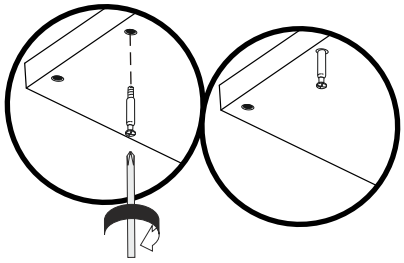

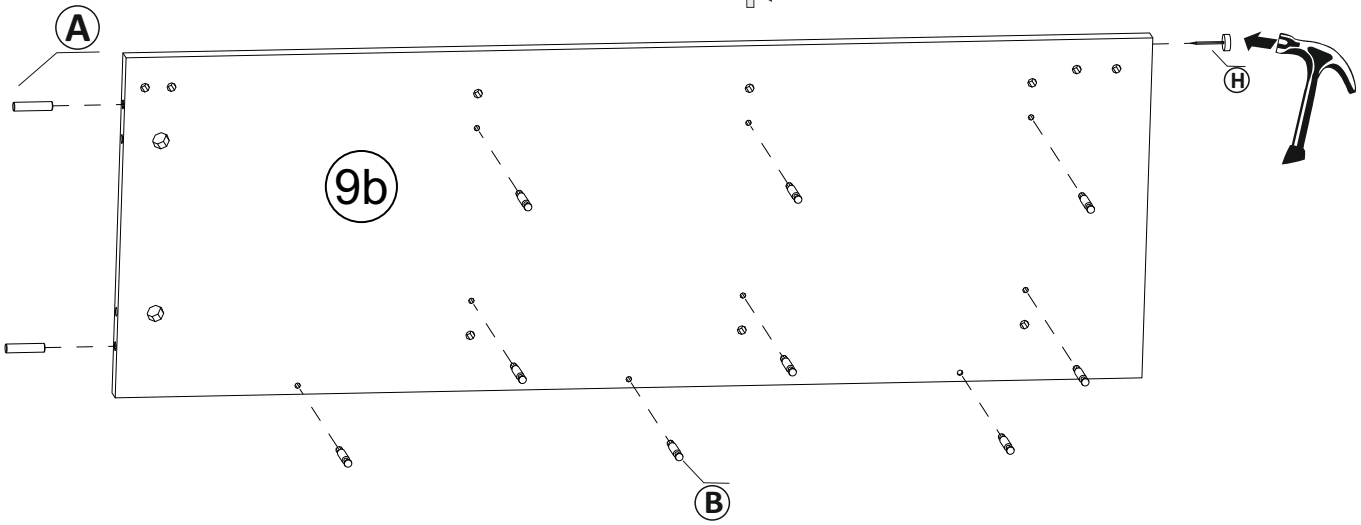

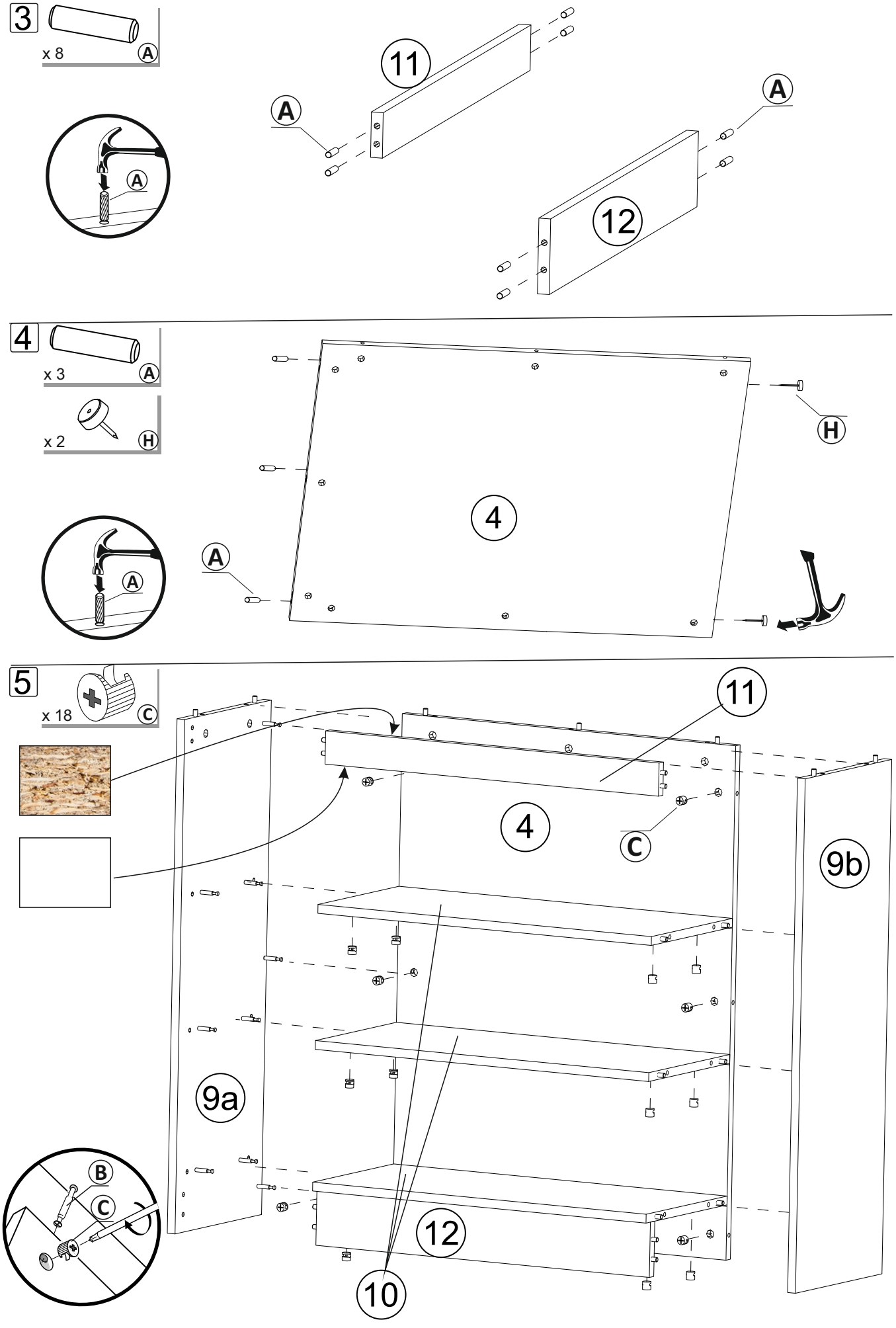
3
x 8
A
11
A
A
12
A
4
x 3
A
x 2
H
H
4
A
A
5
x 18
C
11
4
C
9b
9a
12
10
B
C

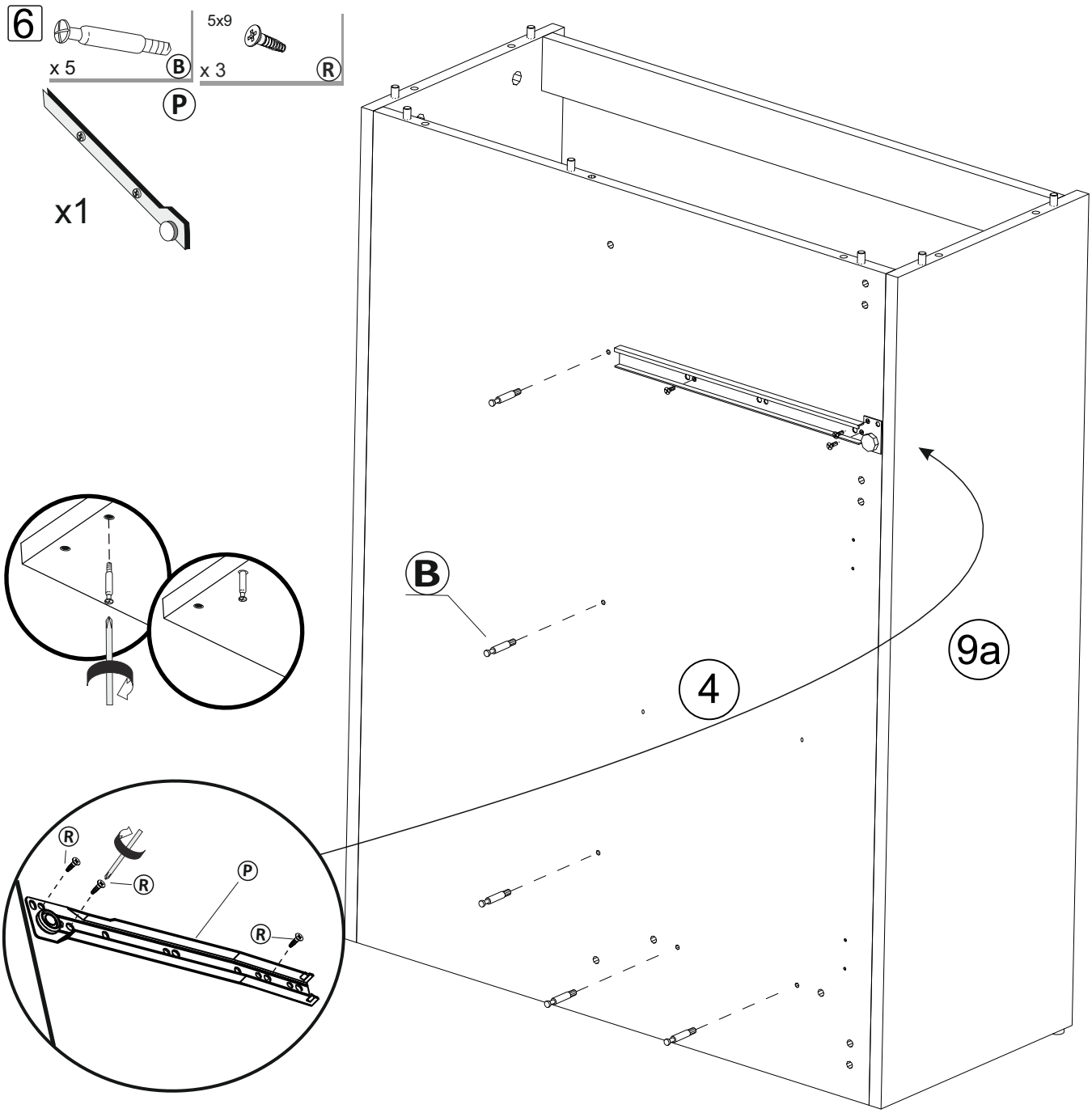
6
x 5
B
5x9
x 3
R
P
x1
B
4
9a
R
R
P
R

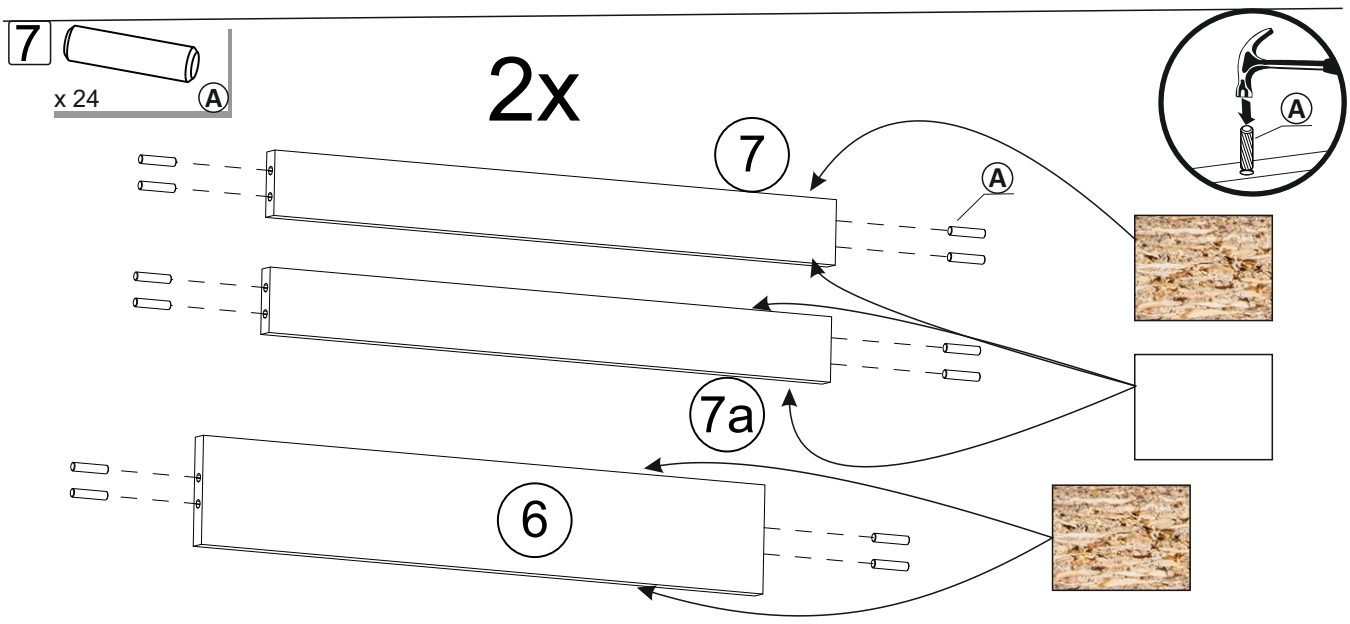
7
x 24
A
2x
A
7
A
7a
6

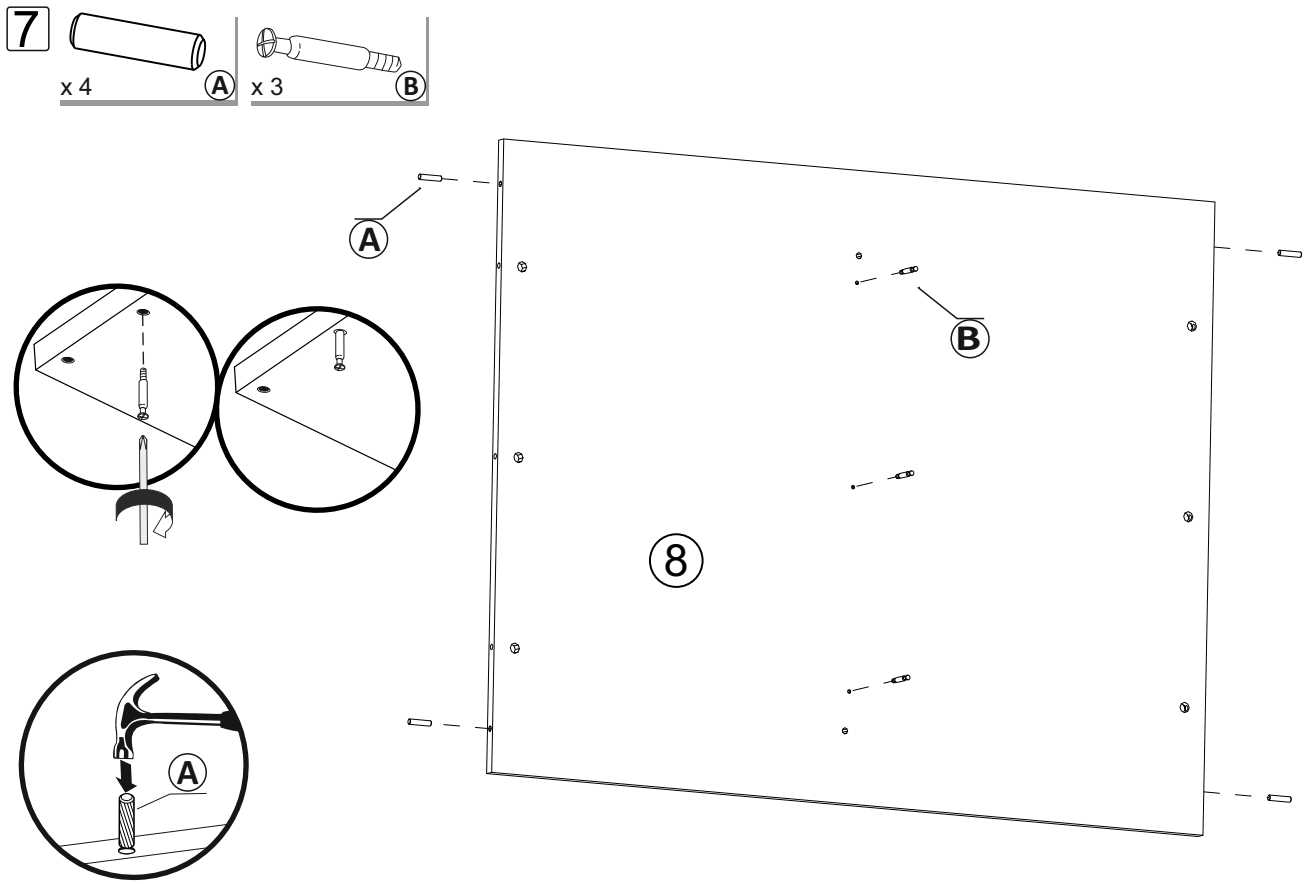
7
x 4
A
x 3
B
A
B
8
A

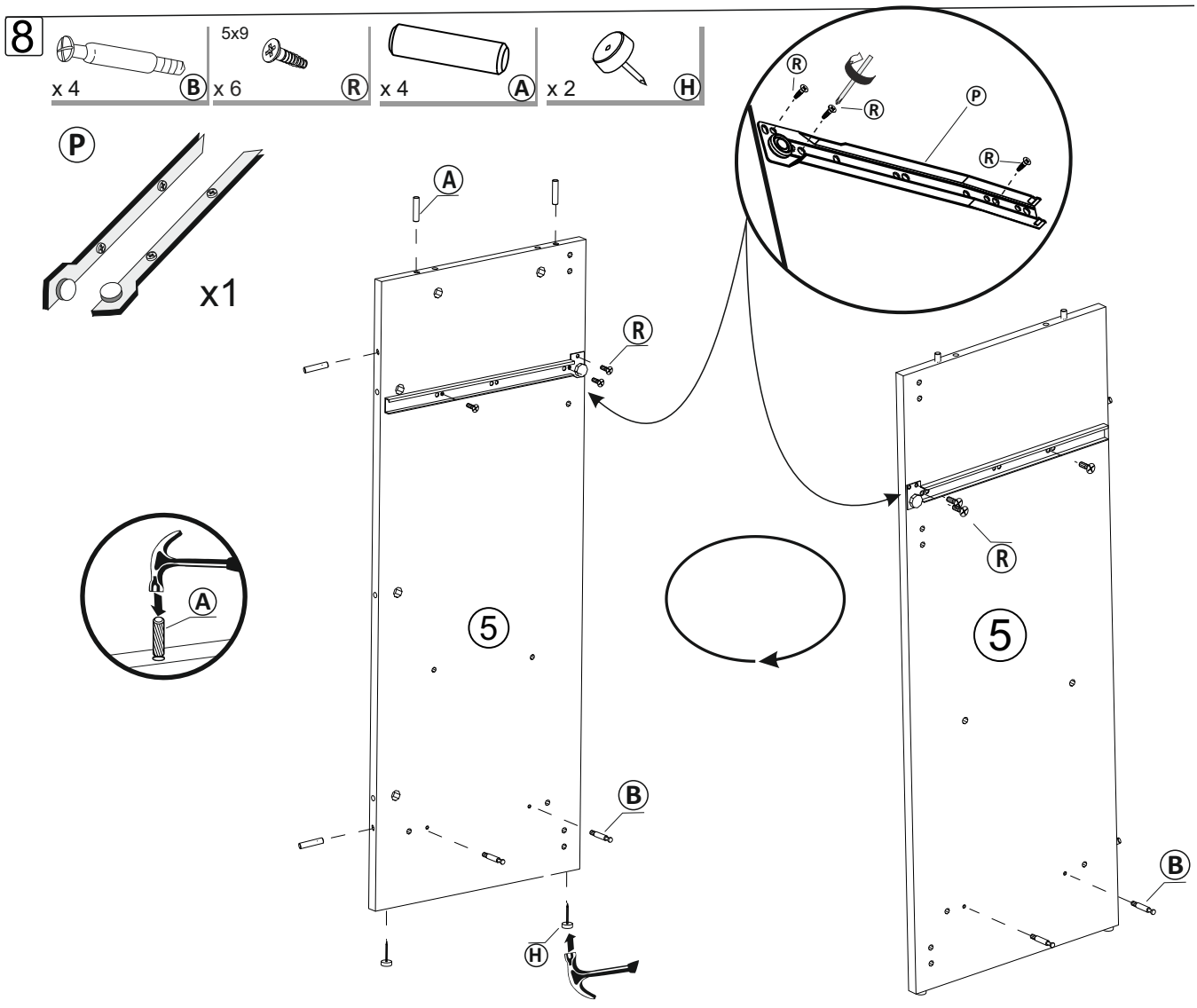
8
x 4
B
5x9
x 6
R
x 4
A
x 2
H
P
x1
A
R
R
P
R
R
5
5
B
B
H
A

9

x 3 C

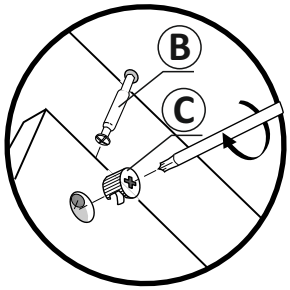

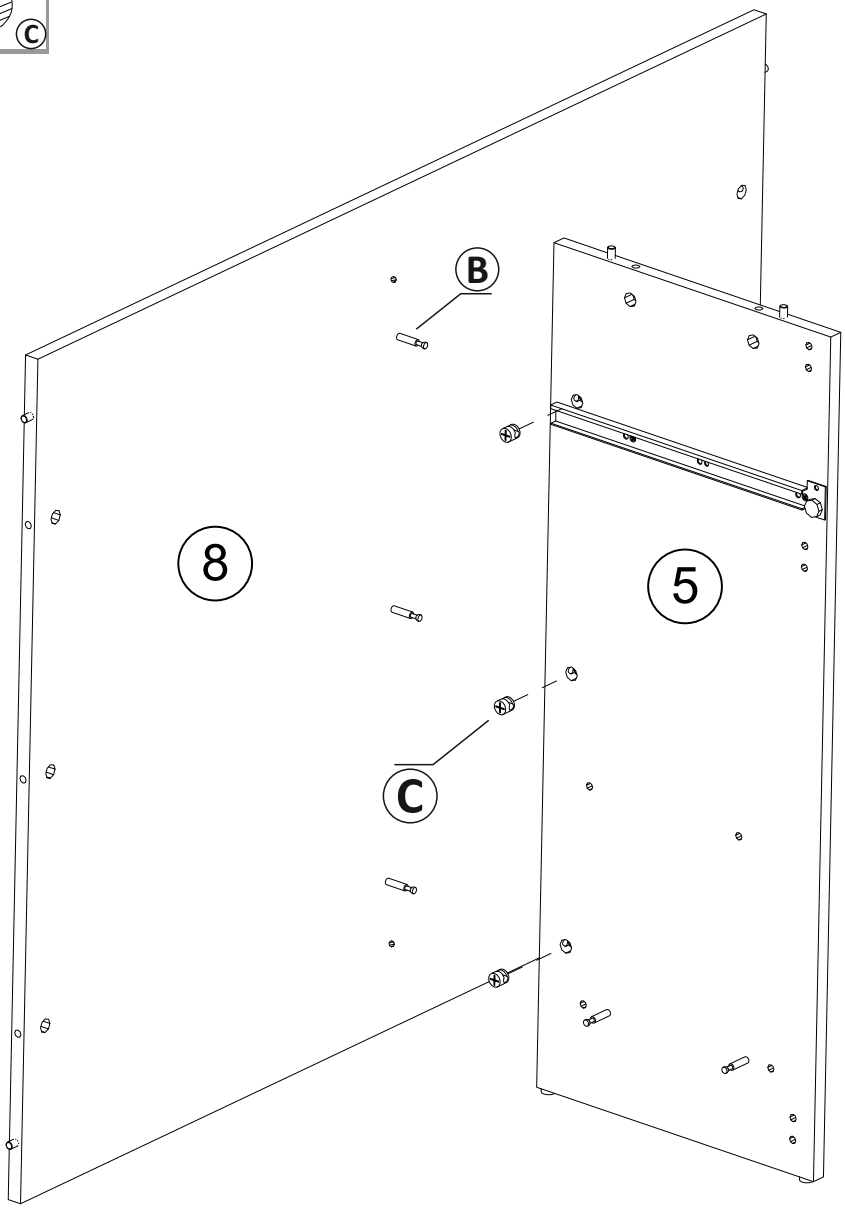

10

x 8 A



2x

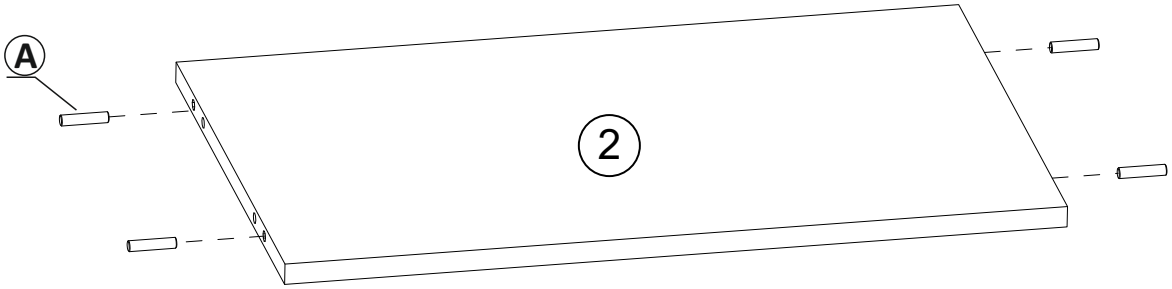

11

x 7 C

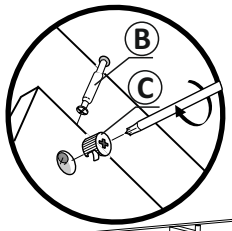

12

x 5 B

5x9

x 3 R

x 2 H

x 3 A

P

x1

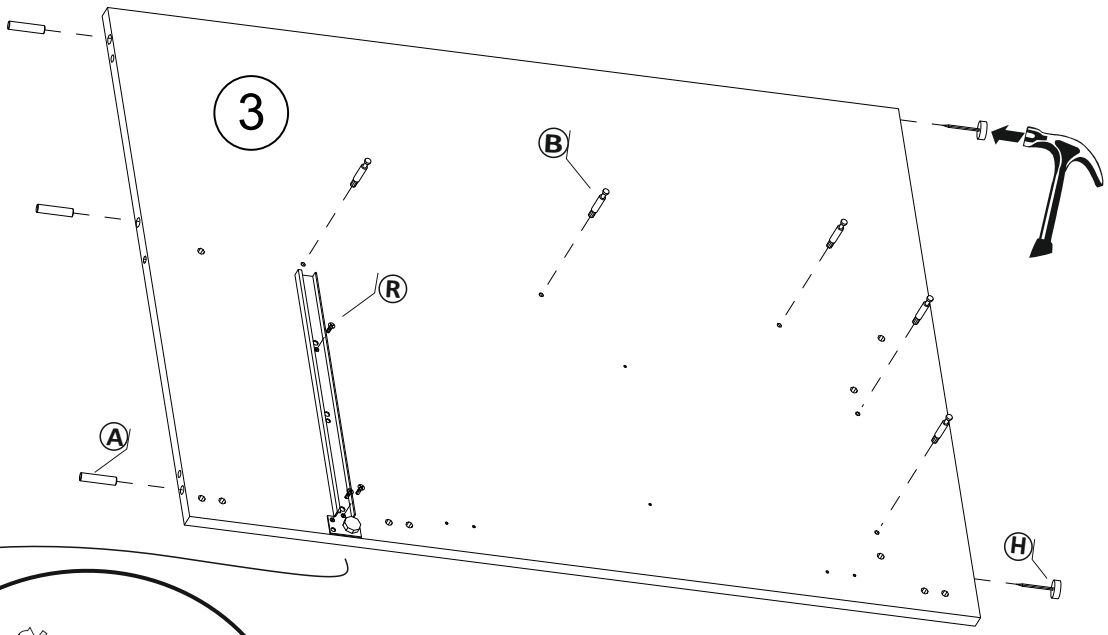

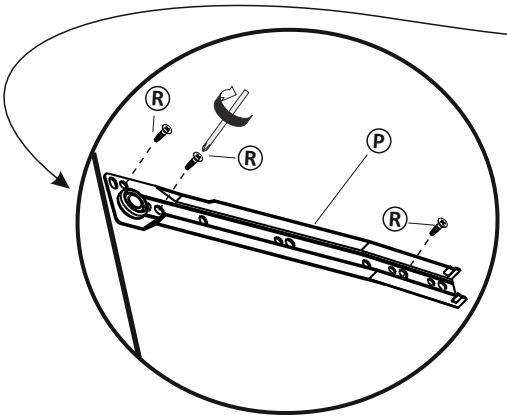

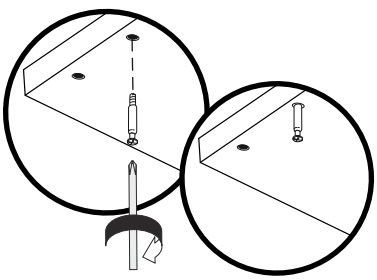

12

x 7 C

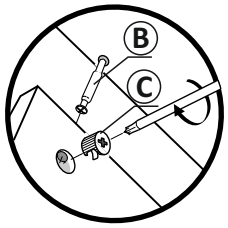

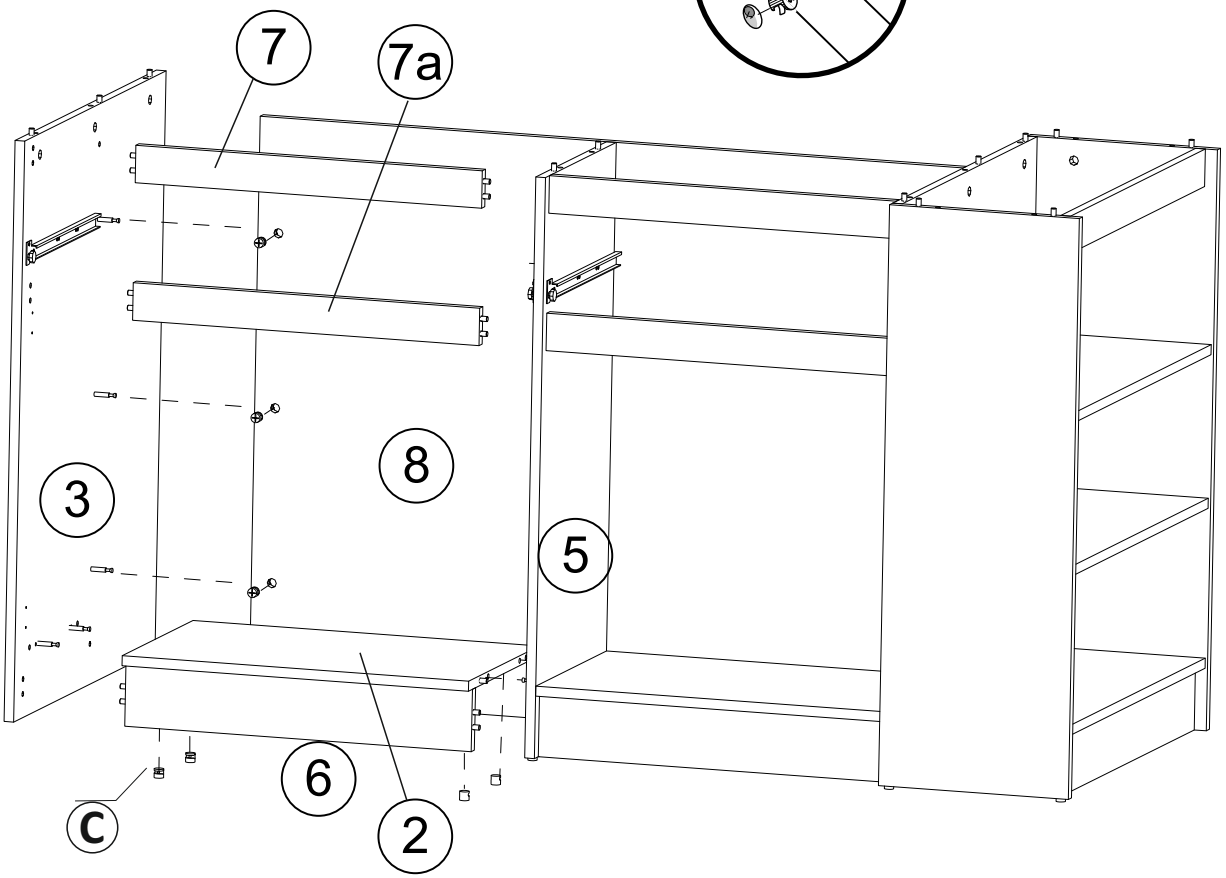

13

x 12 B

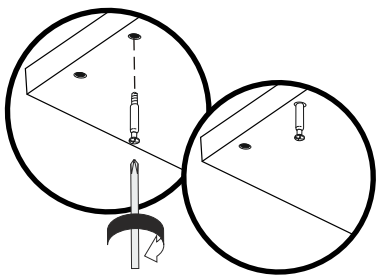

14

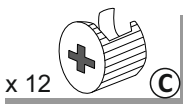

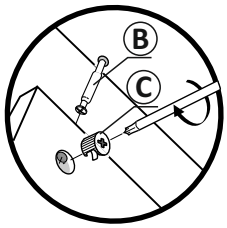

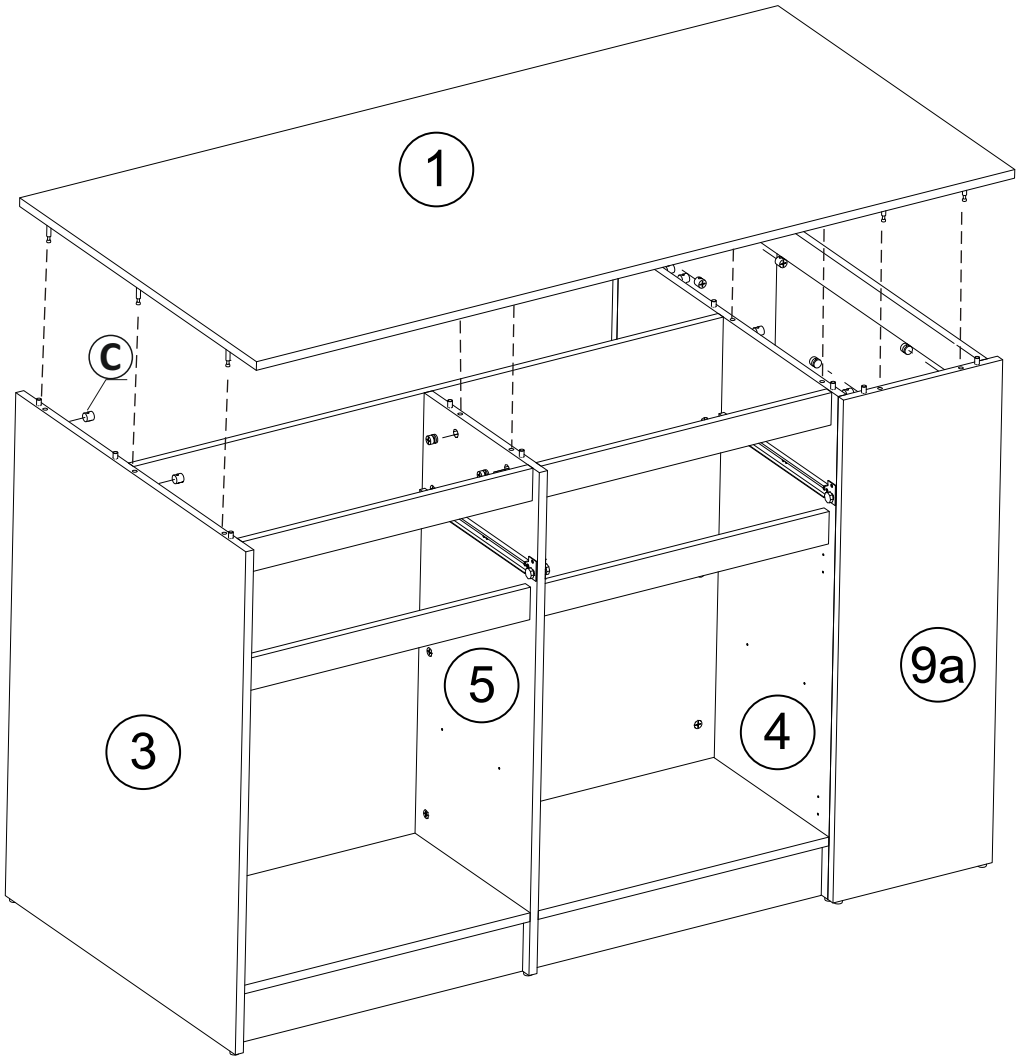

15

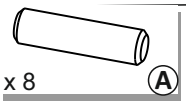

2x



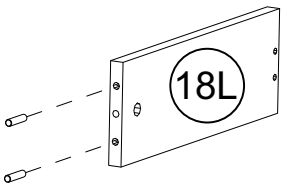

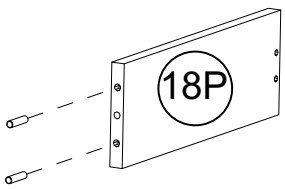

16

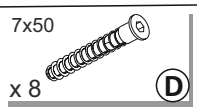

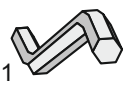

2x

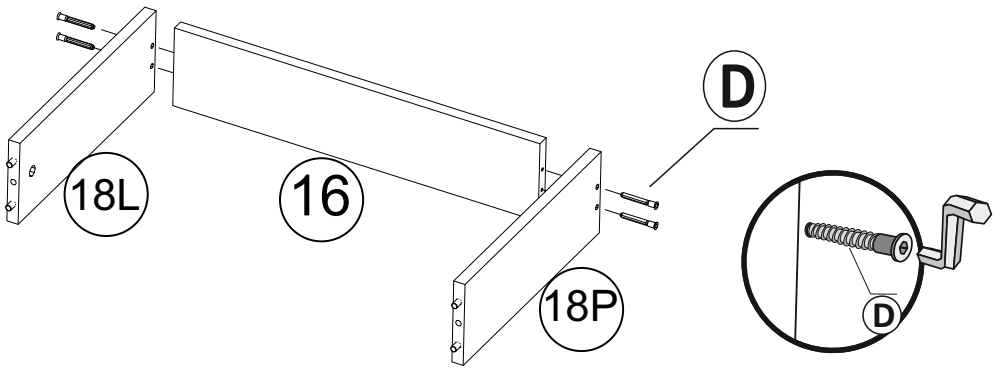

17

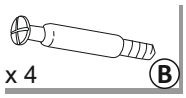

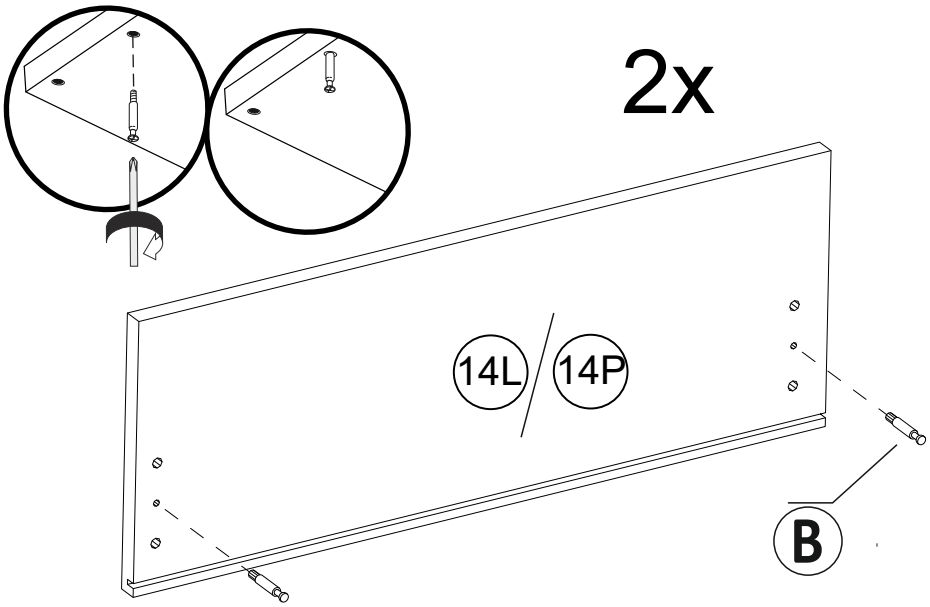

18

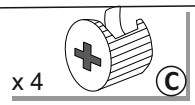

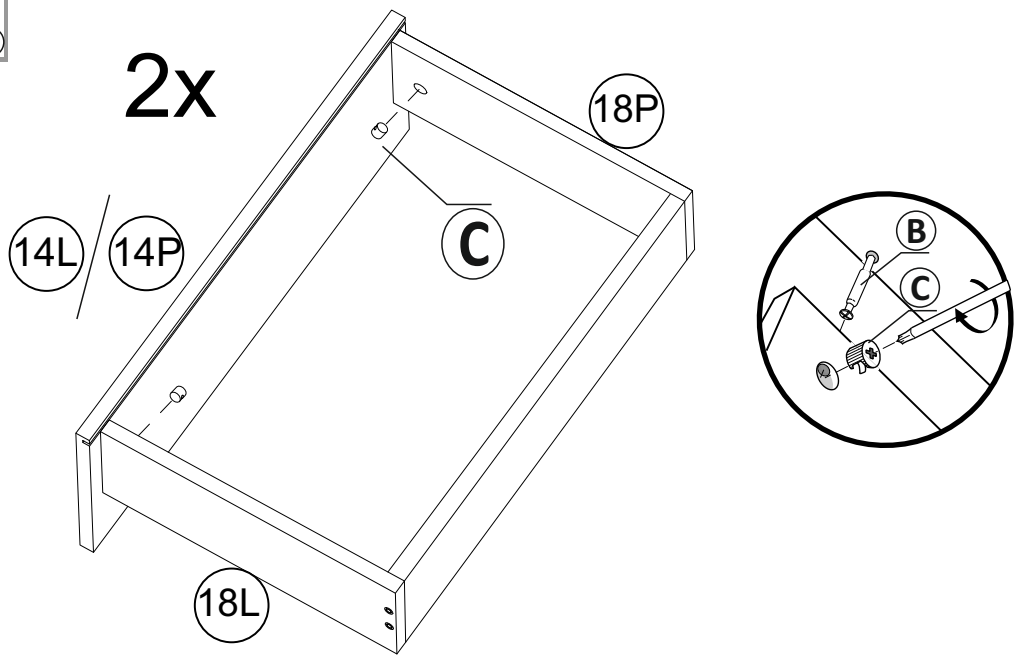

19

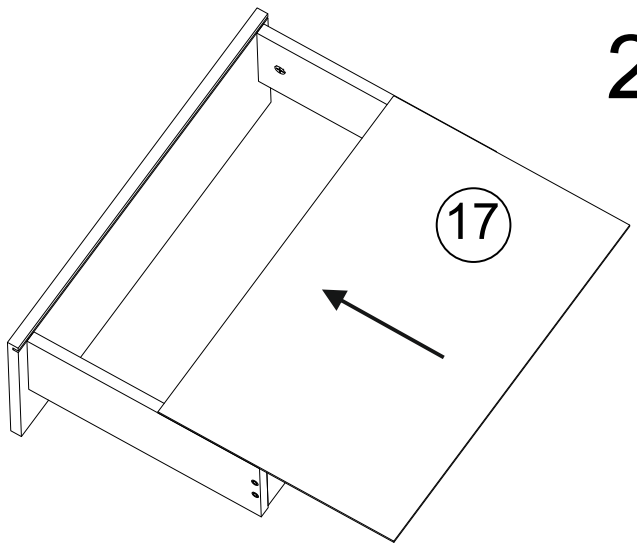

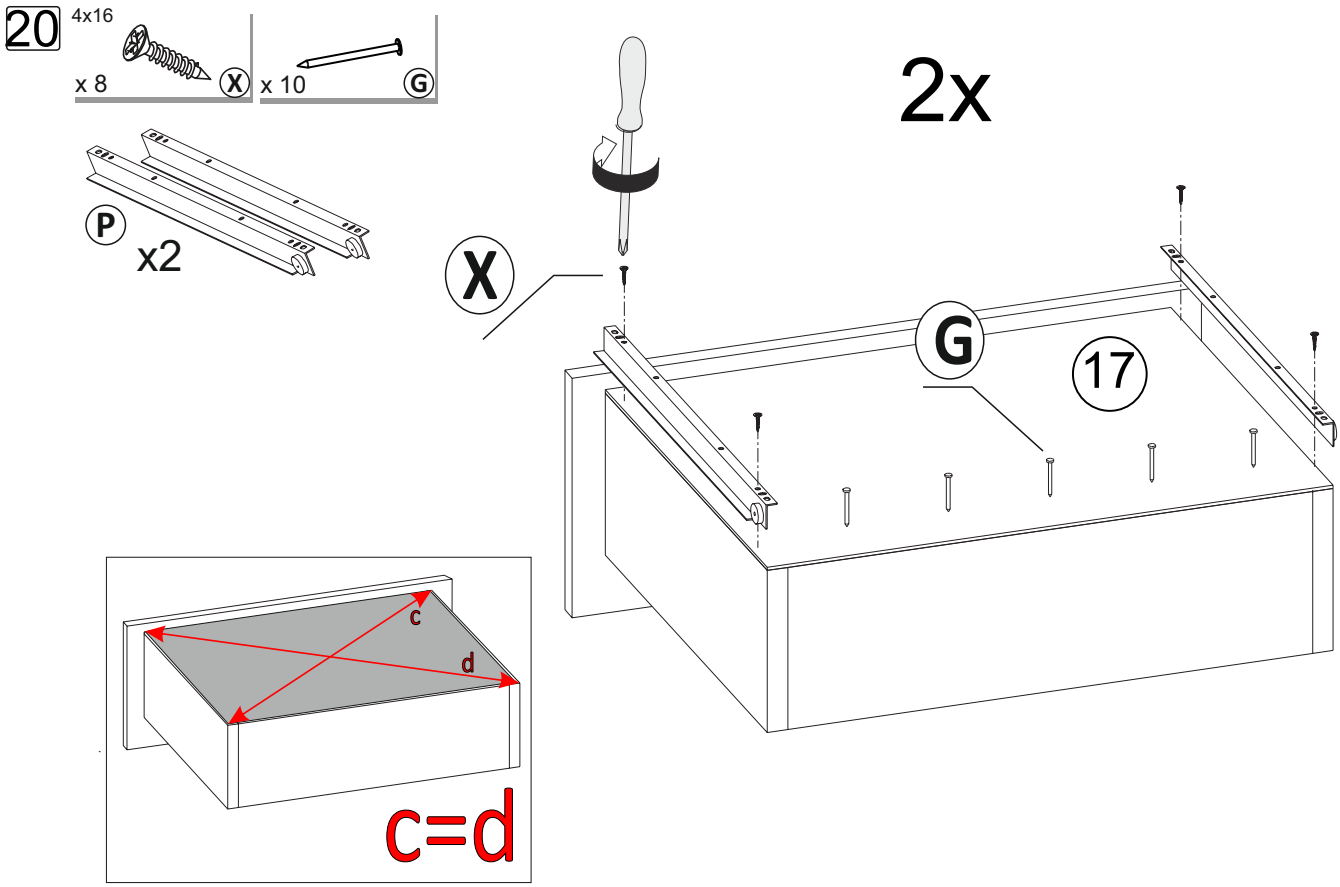
20
4x16
x 8
X
x 10
G
P
x2
2x
X
G
17
c
d
c=d

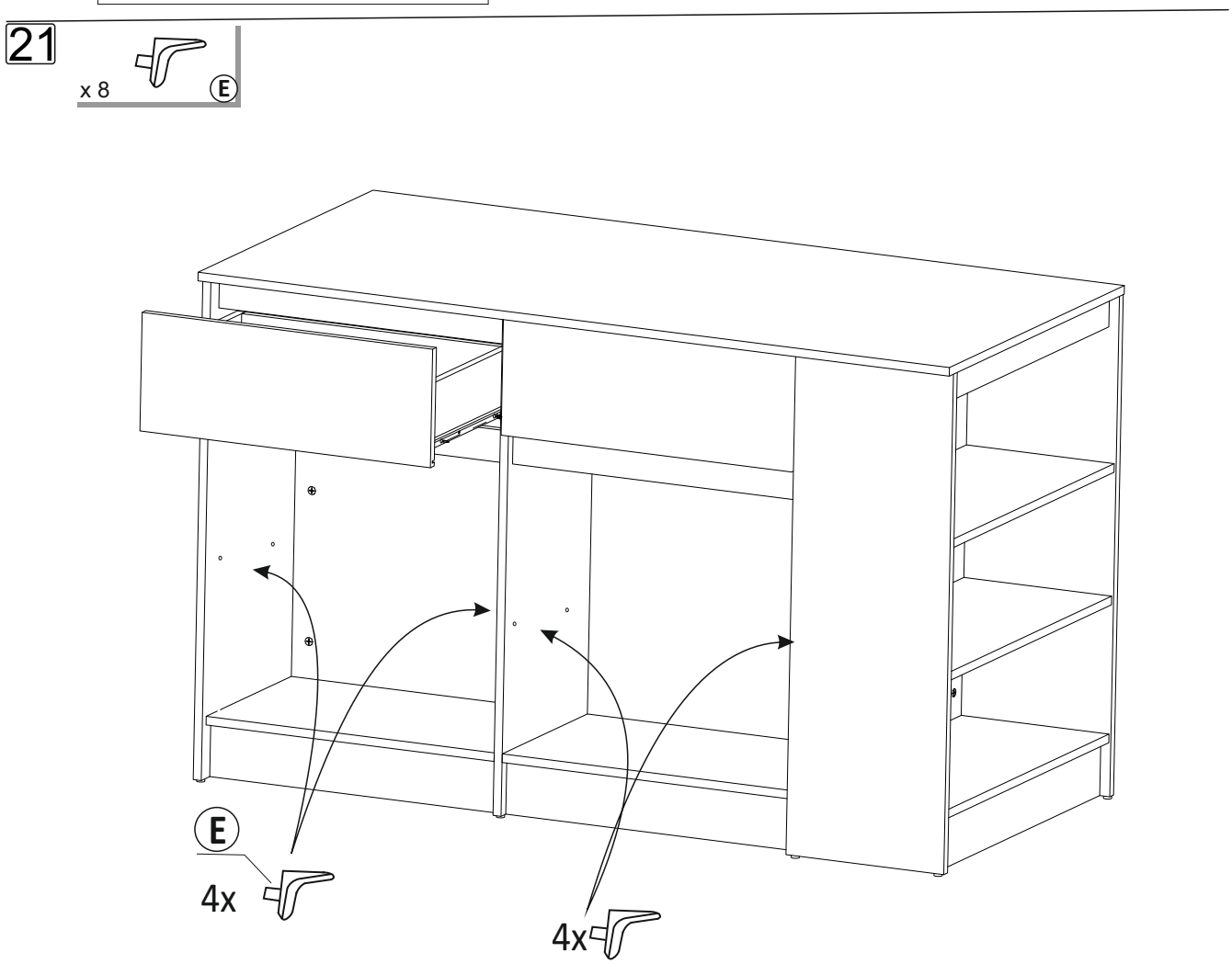
21
x 8
E
E
4x
4x

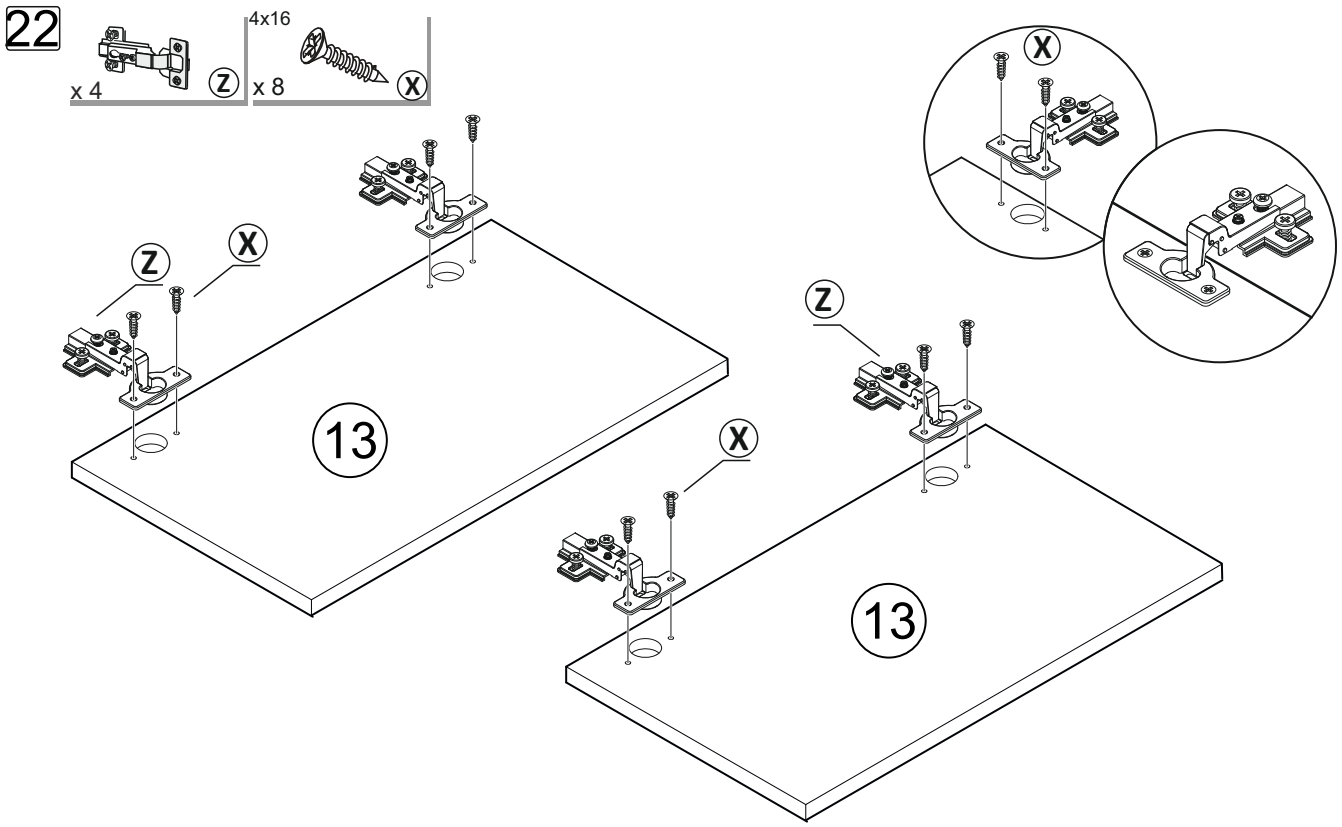
22
4x16
x 4
Z
x 8
X
Z
X
13
X
Z
13

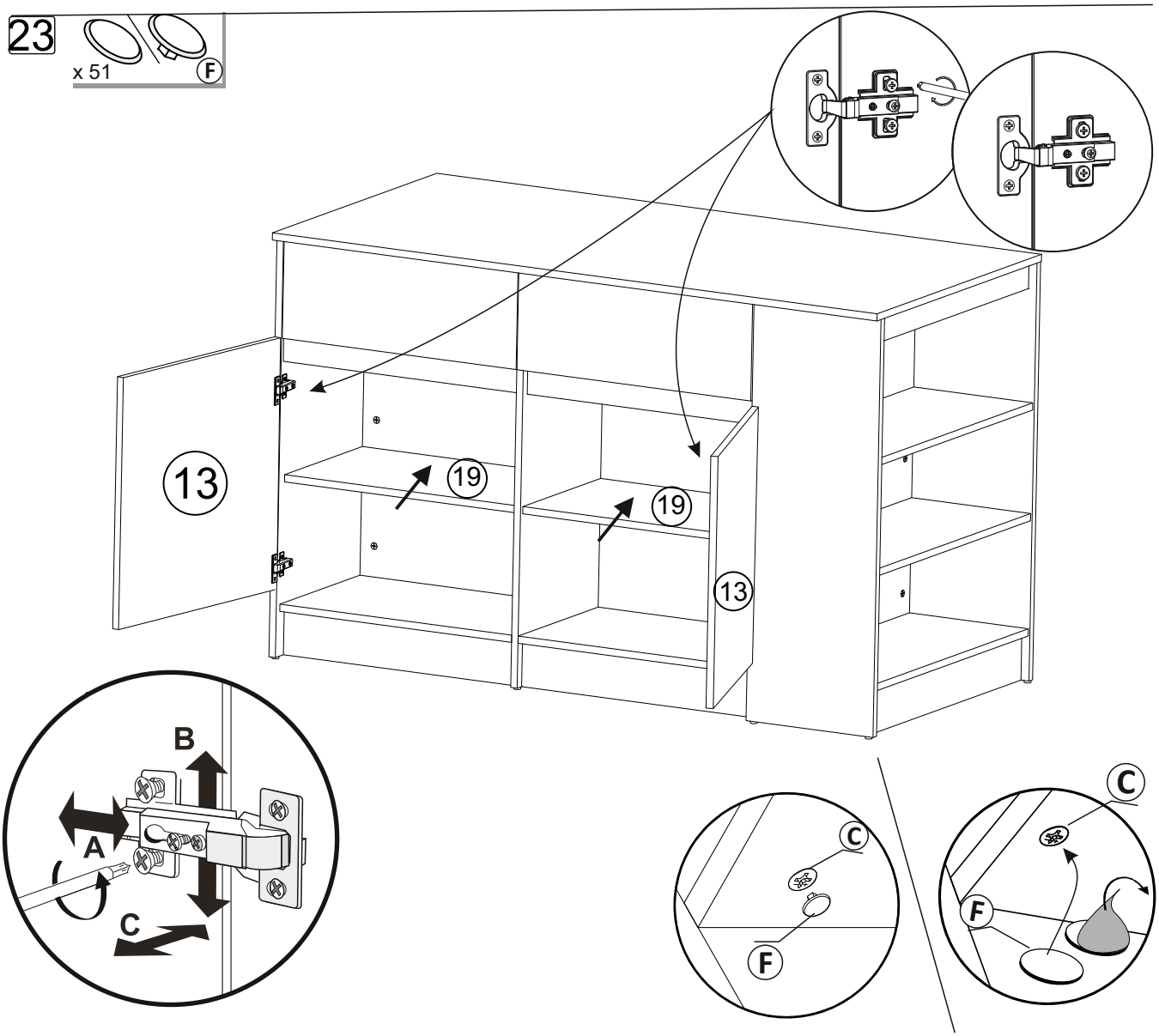
23
x 51
F
13
19
19
13
B
A
C
C
F
C
F