INSTRUKCJA MONTAŻU / ASSEMBLY INSTRUCTIONS

# MALWA M1

| | | | |
|---|---|---|---|
| Mebel należy montować na miękkim podłożu | Mebel należy konserwować typowymi środkami do konserwacji mebli | Furniture should be assembled on the soft surface | Piece of furniture should be preserved by the typical furniture care substances |

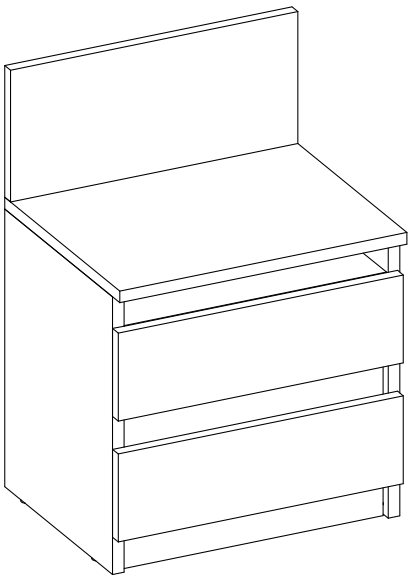

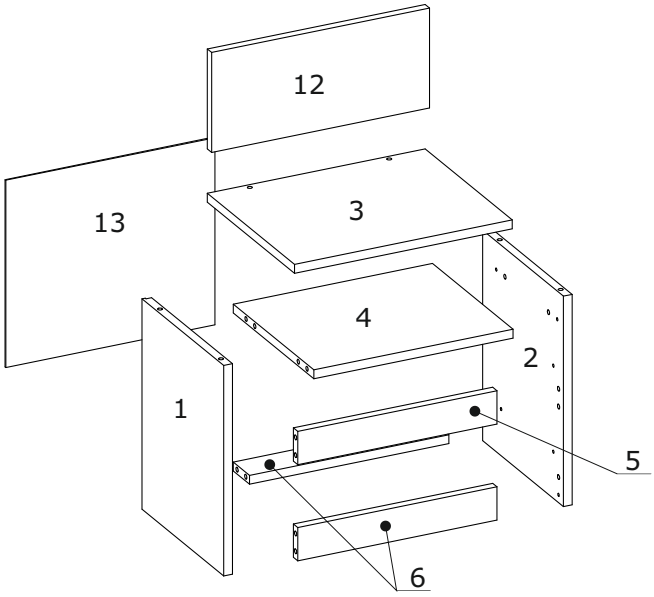


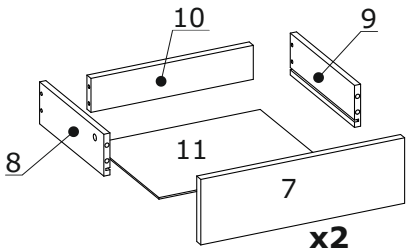


OKUCIE: / FITTINGS:

| | | | |
|---|---|---|---|
| B1 8x35 x16 | M1 12x15 x8 | T1 x12 | S5 3 x 20 mm x8 |
| K5 x4 | M4 10x12 x4 | G2 1,4x25mm x18 | R23 250mm x2 |
| K1 7,0x50 x2 | L1 x1 | F36 x4 | |
| G7 x1 | S6 4 x 16 mm x8 | K3 6x40 x8 | S7 6,3x13mm x8 |







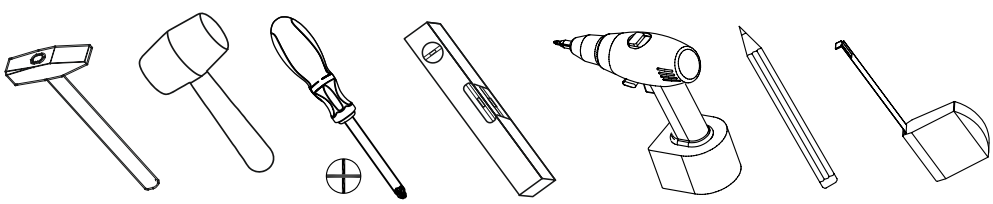

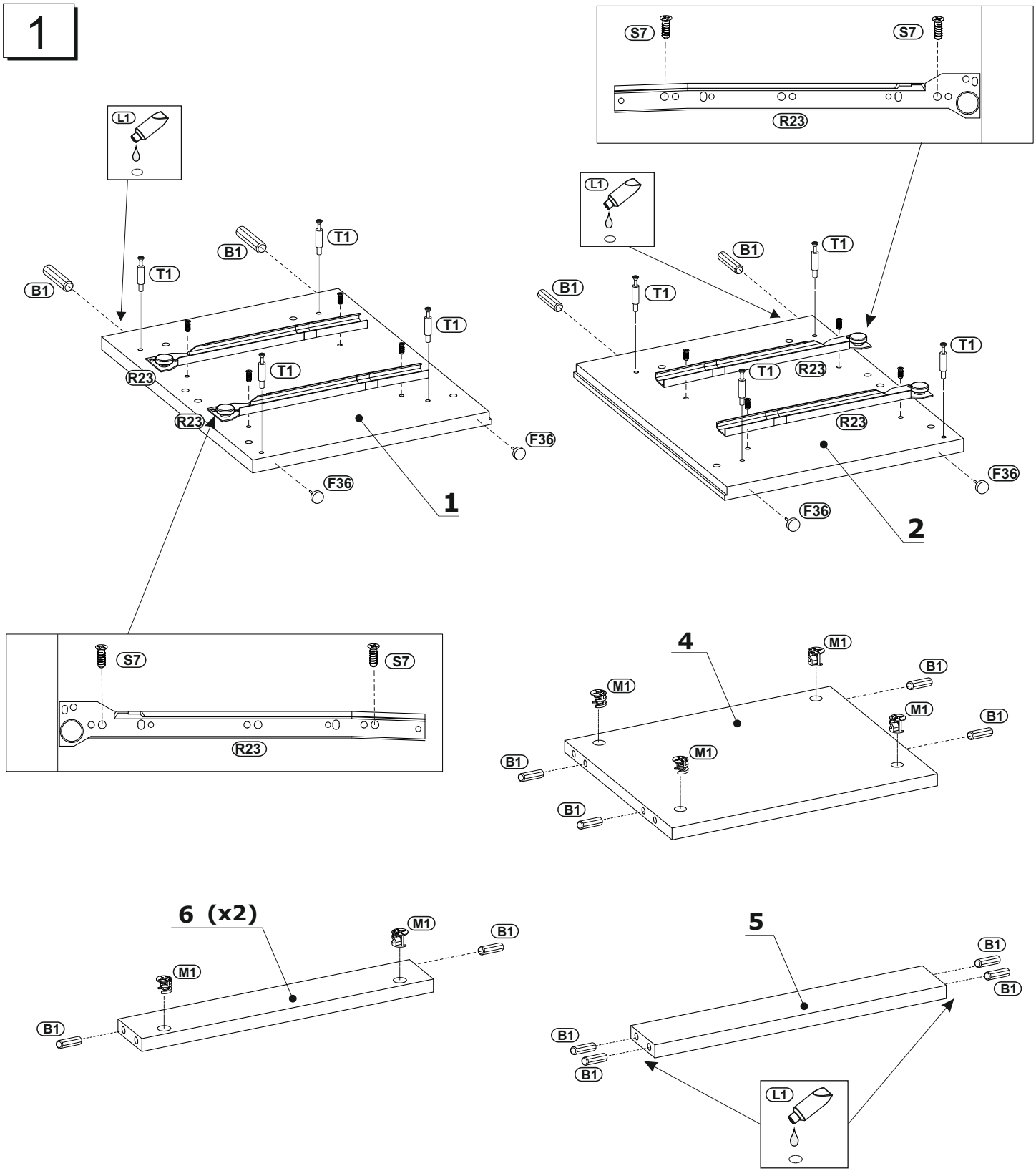
1
S7
S7
R23
L1
B1
T1
B1
T1
T1
T1
R23
R23
F36
F36
1
L1
B1
T1
B1
T1
T1
R23
T1
R23
F36
F36
2
S7
S7
R23
4
M1
M1
B1
M1
B1
M1
B1
B1
6 (x2)
M1
M1
B1
B1
5
B1
B1
B1
L1

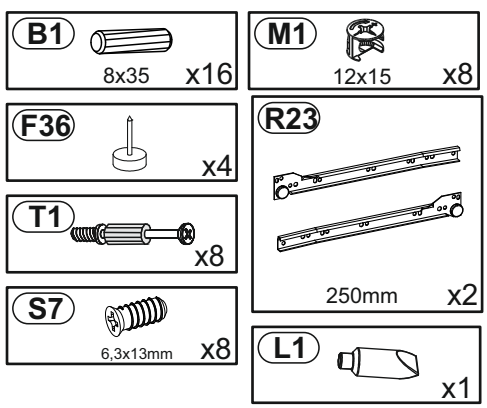
B1
8x35
x16
M1
12x15
x8
F36
x4
R23
250mm
x2
T1
x8
S7
6,3x13mm
x8
L1
x1

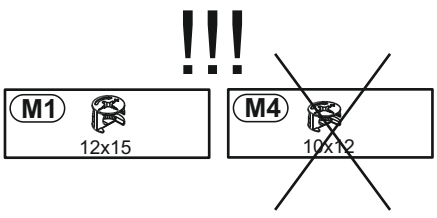
!!!
M1
12x15
M4
10x12

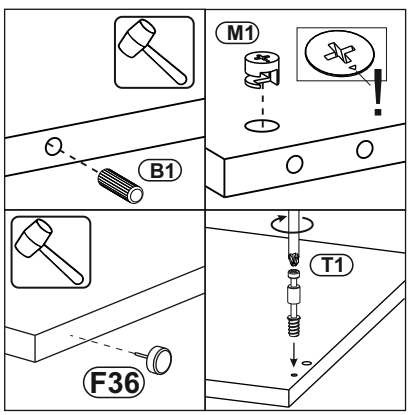
M1
!
B1
T1
F36

## 2

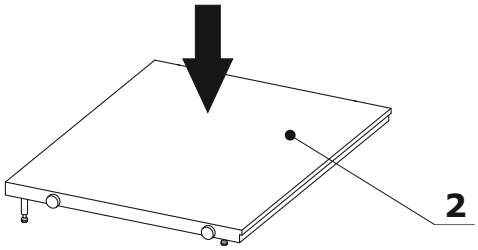


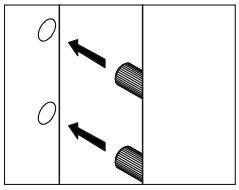

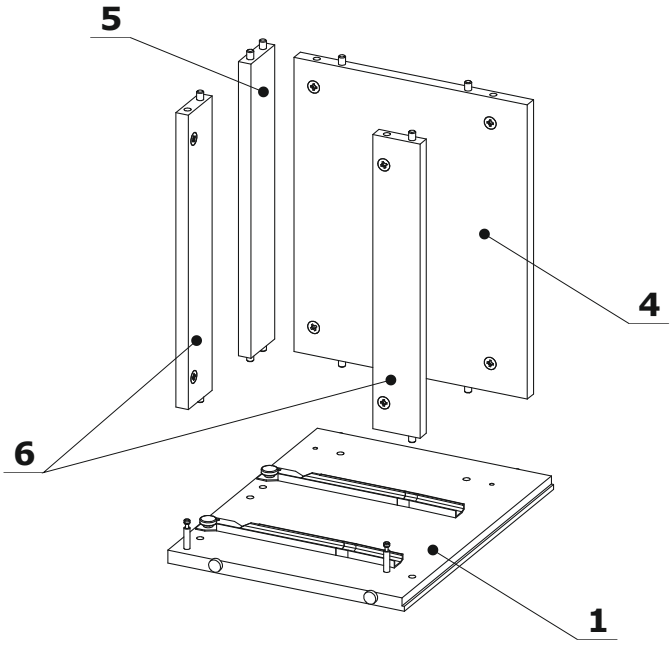


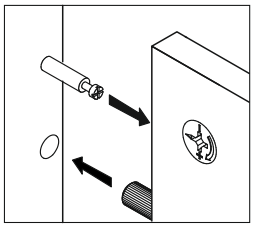

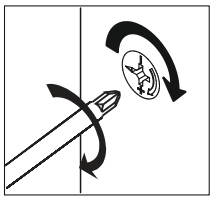

## 3

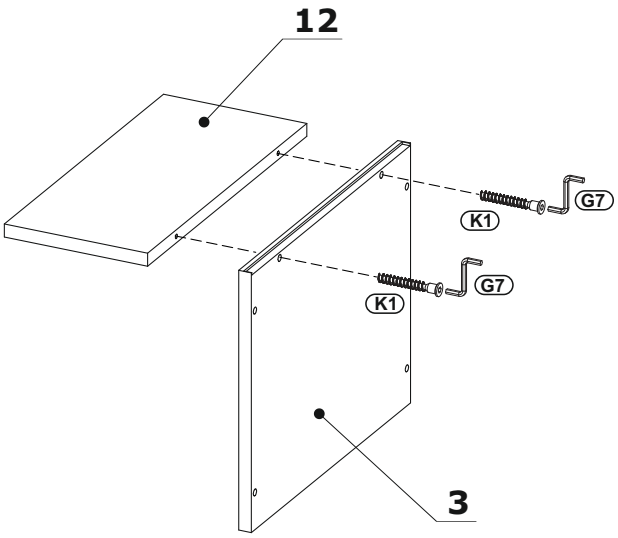


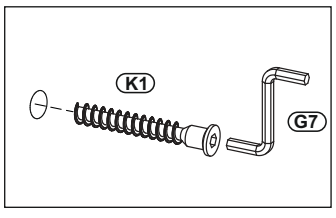


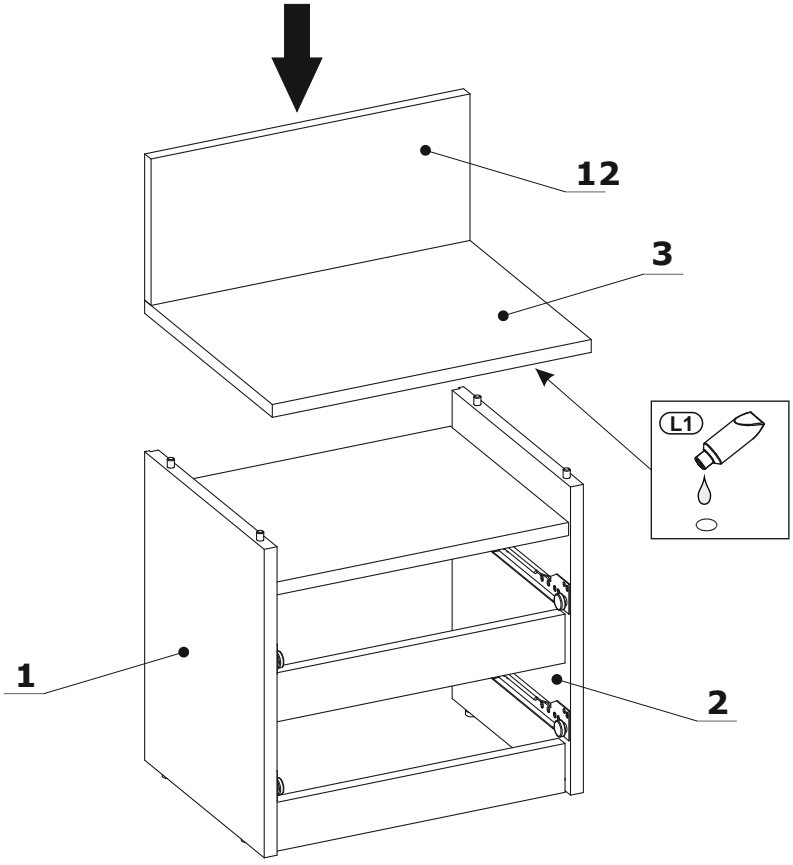


| K1 | G7 | L1 |
|---|---|---|
| 7,0x50 x2 | x1 | x1 |

# 4

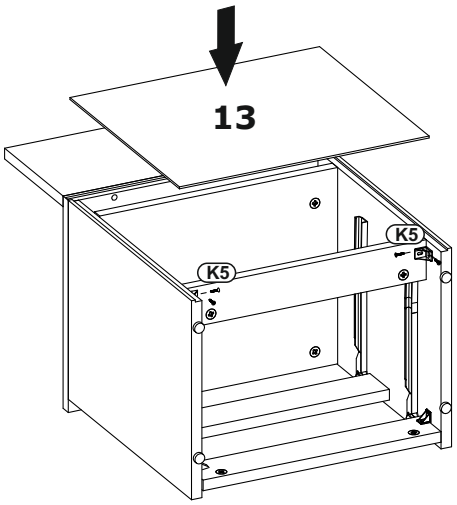


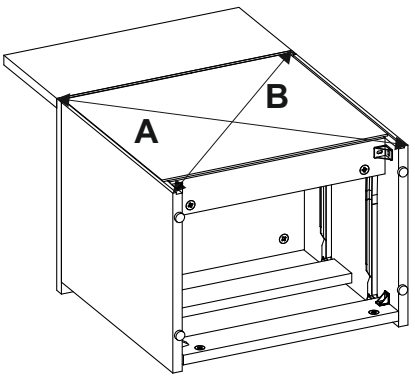


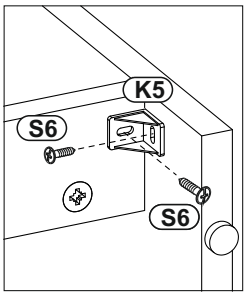


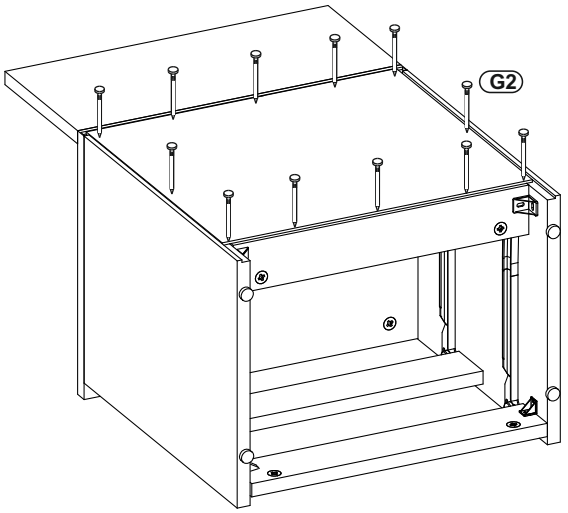


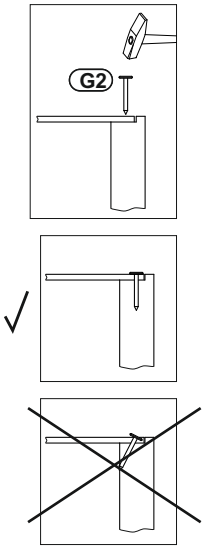


# 5

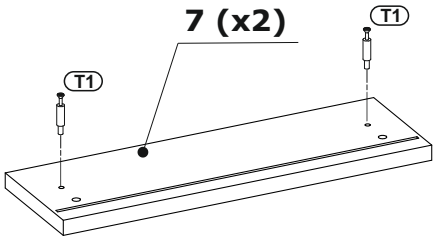


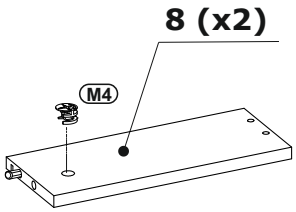


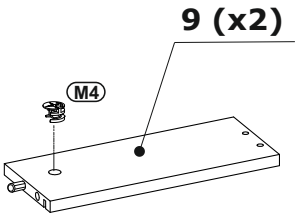


| | | |
|---|---|---|
| K5 x2 | G2 1,4x25mm x12 | M4 10x12 x4 |
| S6 4 x 16 mm x8 | | B1 8x35 x4 |
| | | T1 x4 |

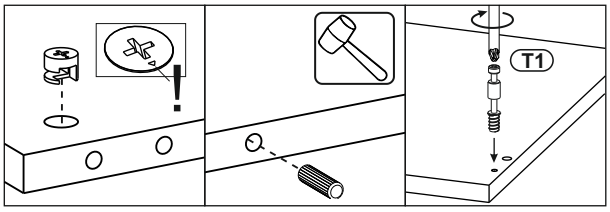

# 6

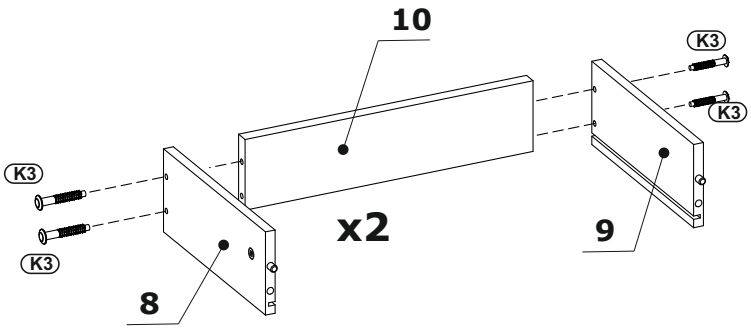
10
K3
K3
K3
K3
x2
9
8

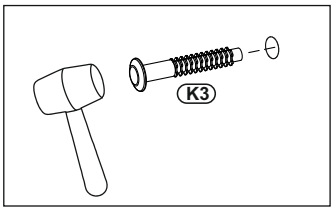
K3

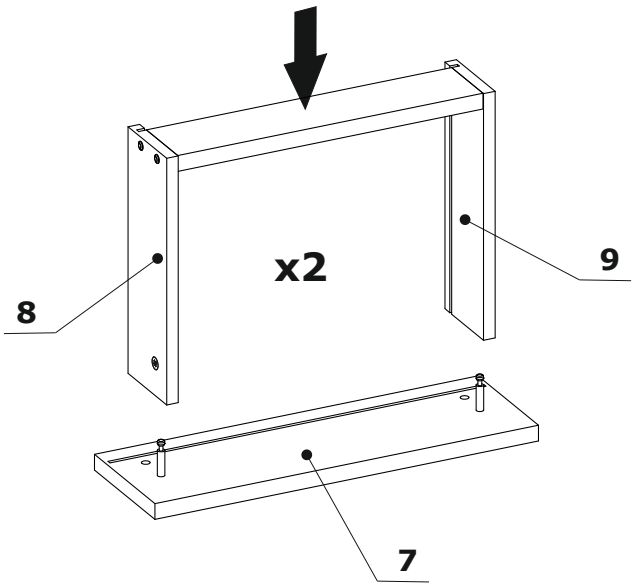
x2
9
8
7

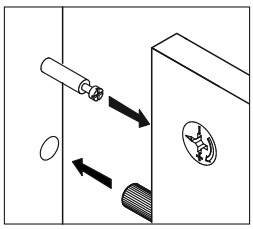

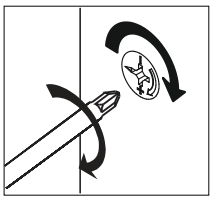

# 7

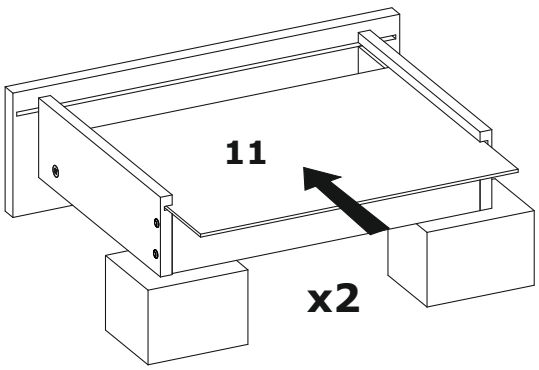
11
x2

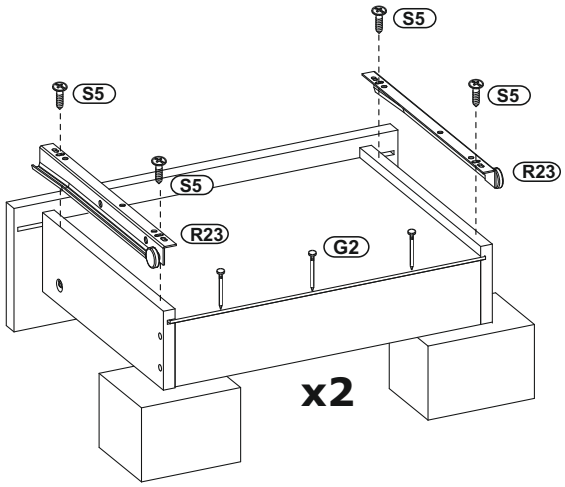
S5
S5
S5
S5
R23
R23
G2
x2

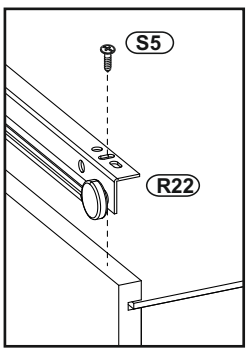
S5
R22

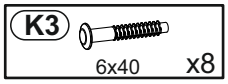
K3
6x40
x8

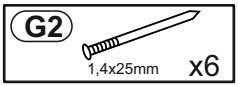
G2
1,4x25mm
x6

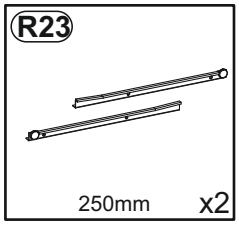
R23
250mm
x2


S5
3 x 20 mm
x8

8

