EC2

90min

10mm / 13mm

pl: ŁÓŻKO Z POJEMNIKIEM
eng: BED WITH STORAGE

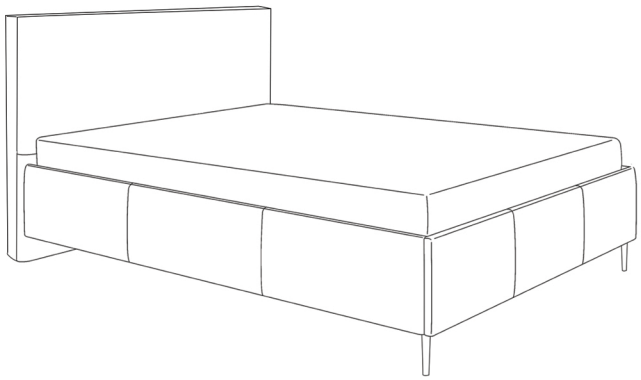

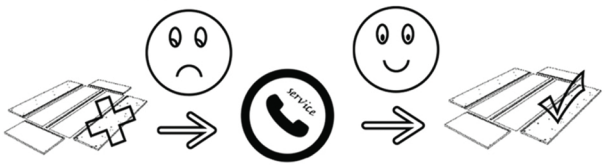

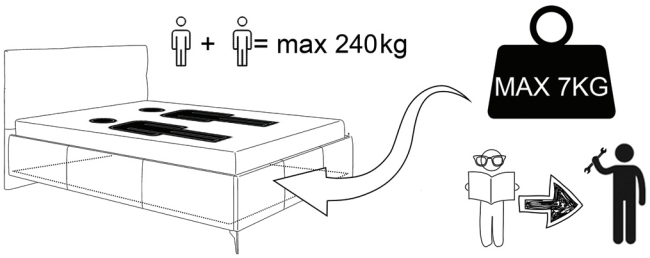

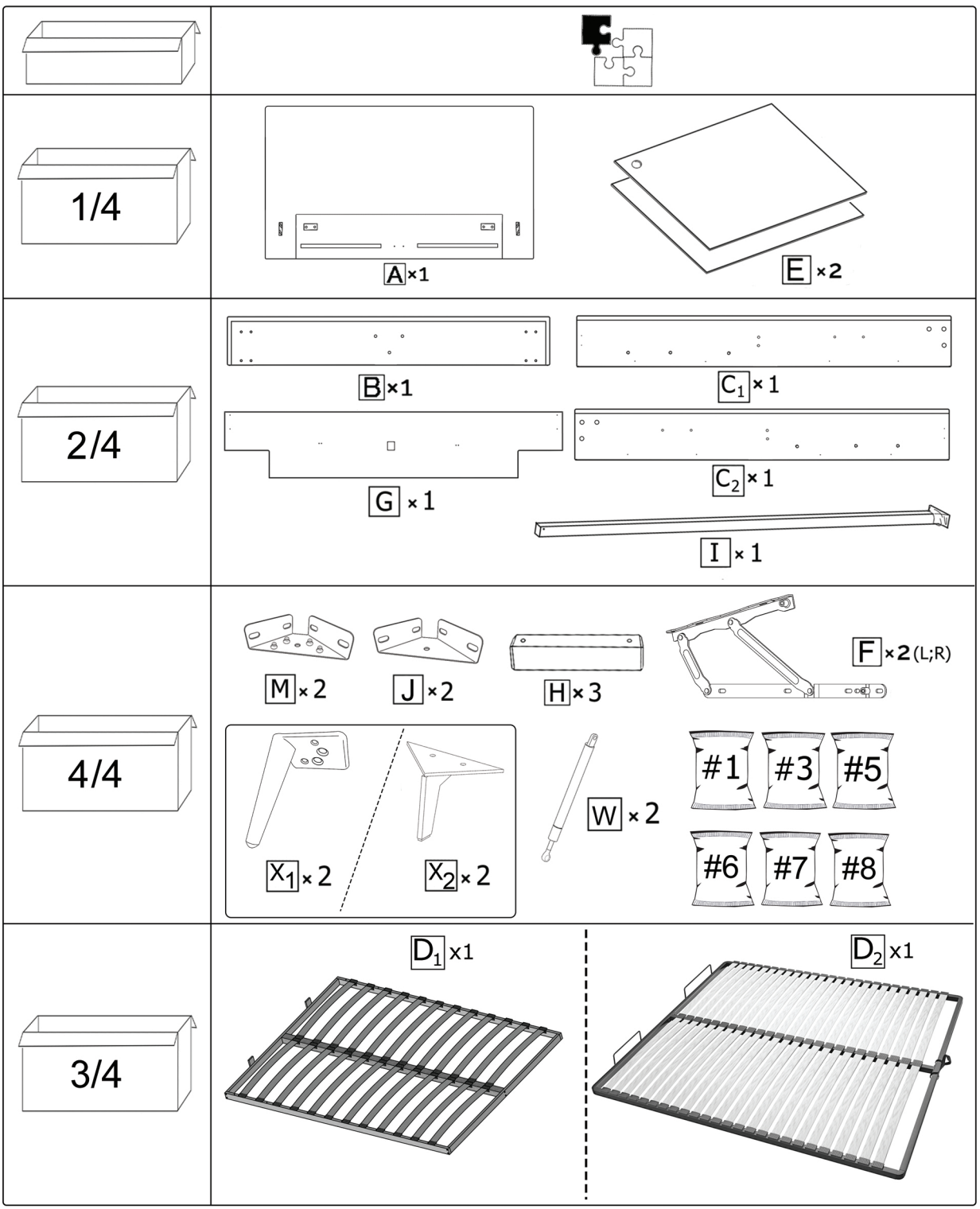

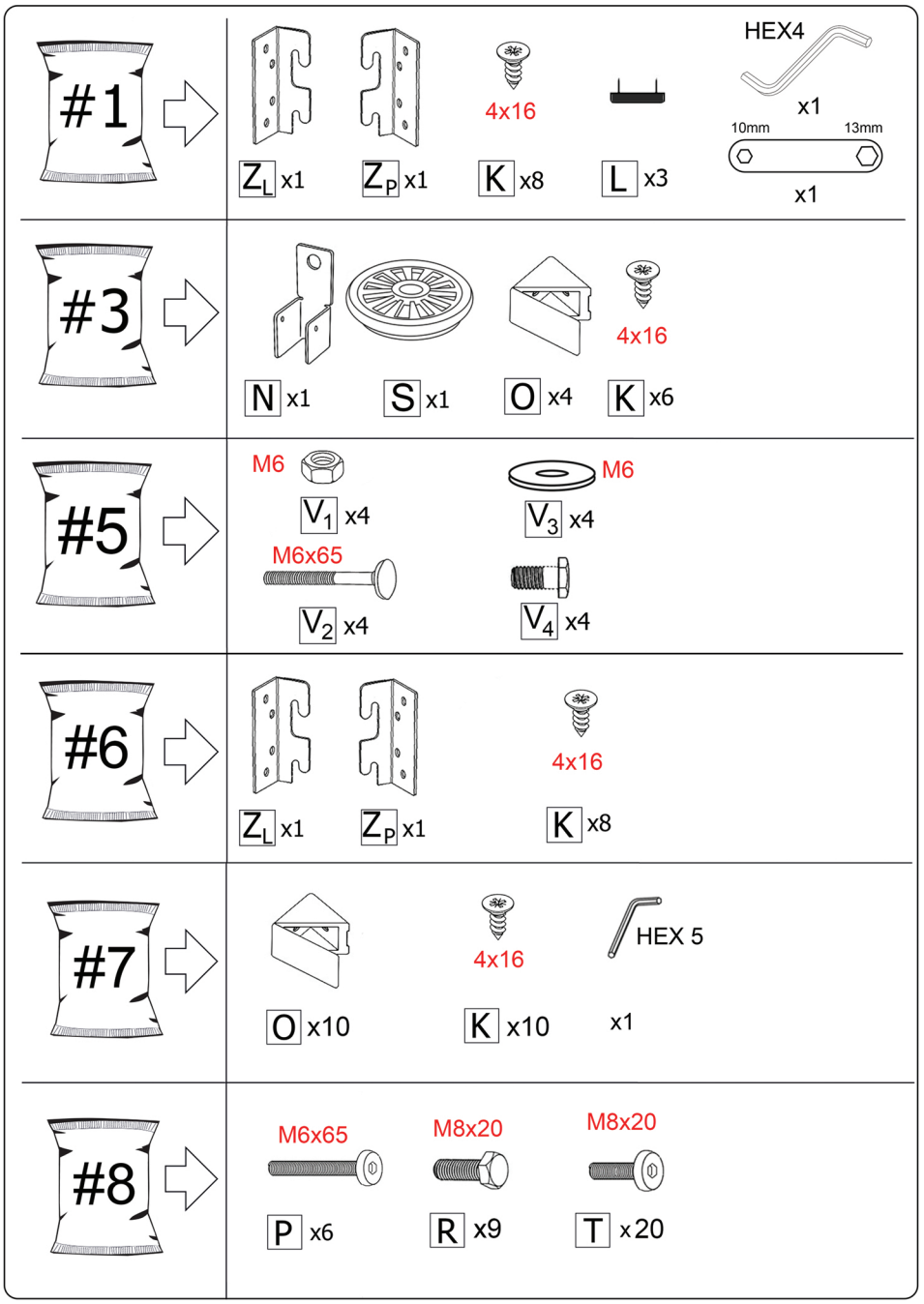
#1
ZL x1
ZP x1
4x16
K x8
L x3
HEX4
x1
10mm
13mm
x1
#3
N x1
S x1
O x4
4x16
K x6
#5
M6
V1 x4
M6
V3 x4
M6x65
V2 x4
V4 x4
#6
ZL x1
ZP x1
4x16
K x8
#7
O x10
4x16
K x10
HEX 5
x1
#8
M6x65
P x6
M8x20
R x9
M8x20
T x20

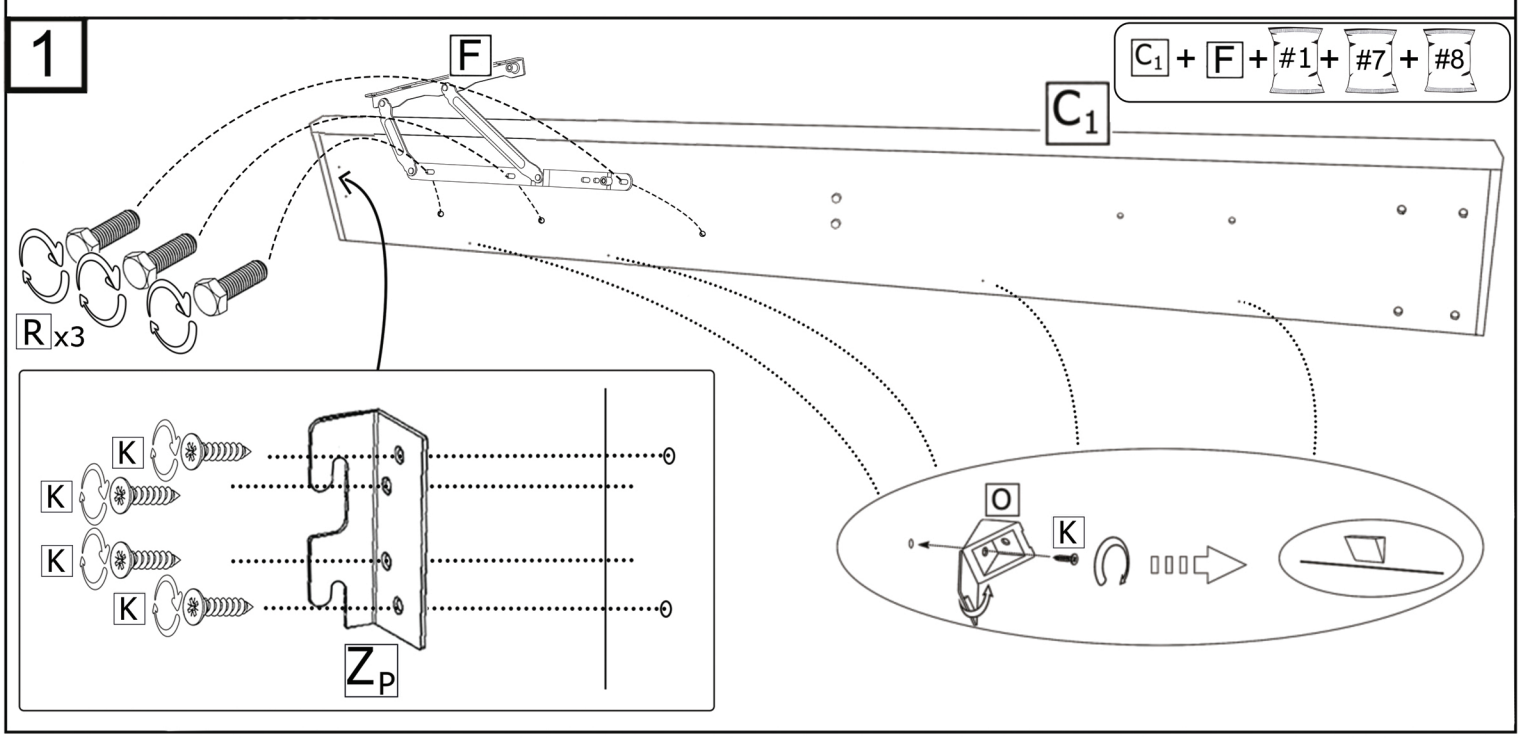
1
C1 + F + #1 + #7 + #8
F
C1
R x3
K
K
K
K
ZP
O
K

2

X + M + J + H + #8

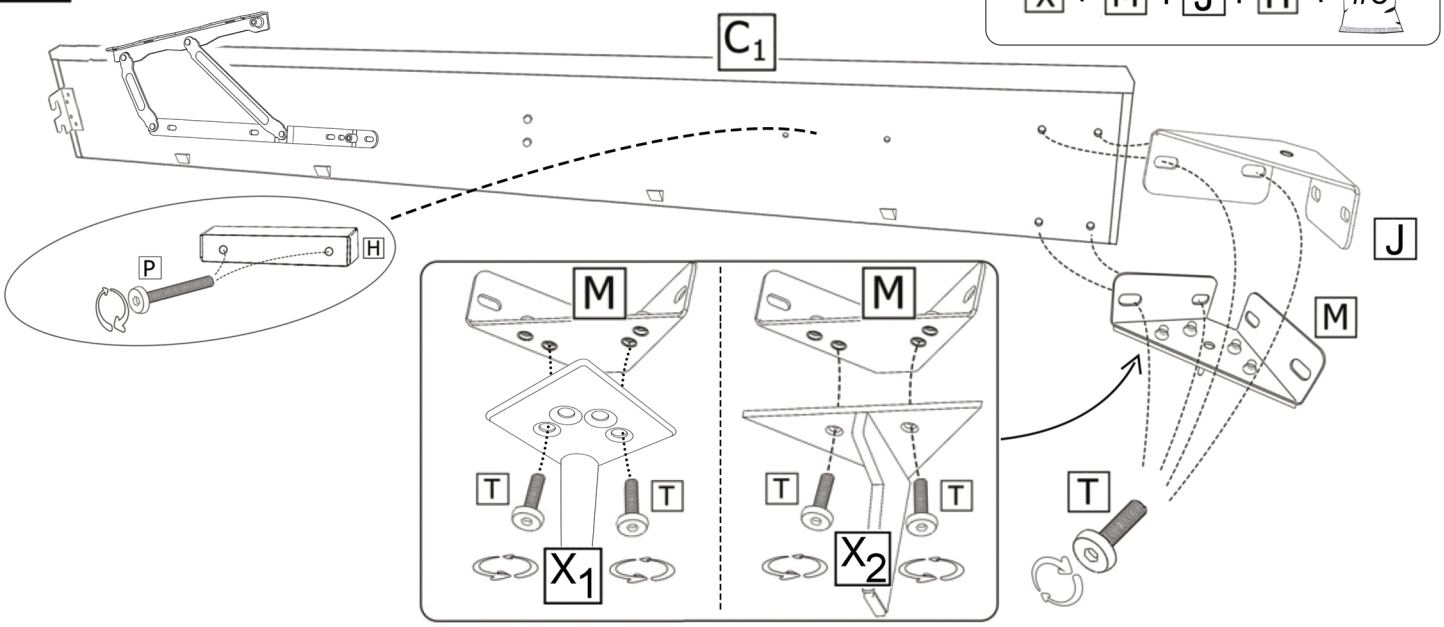

3

C2 + F + #1 + #7 + #8

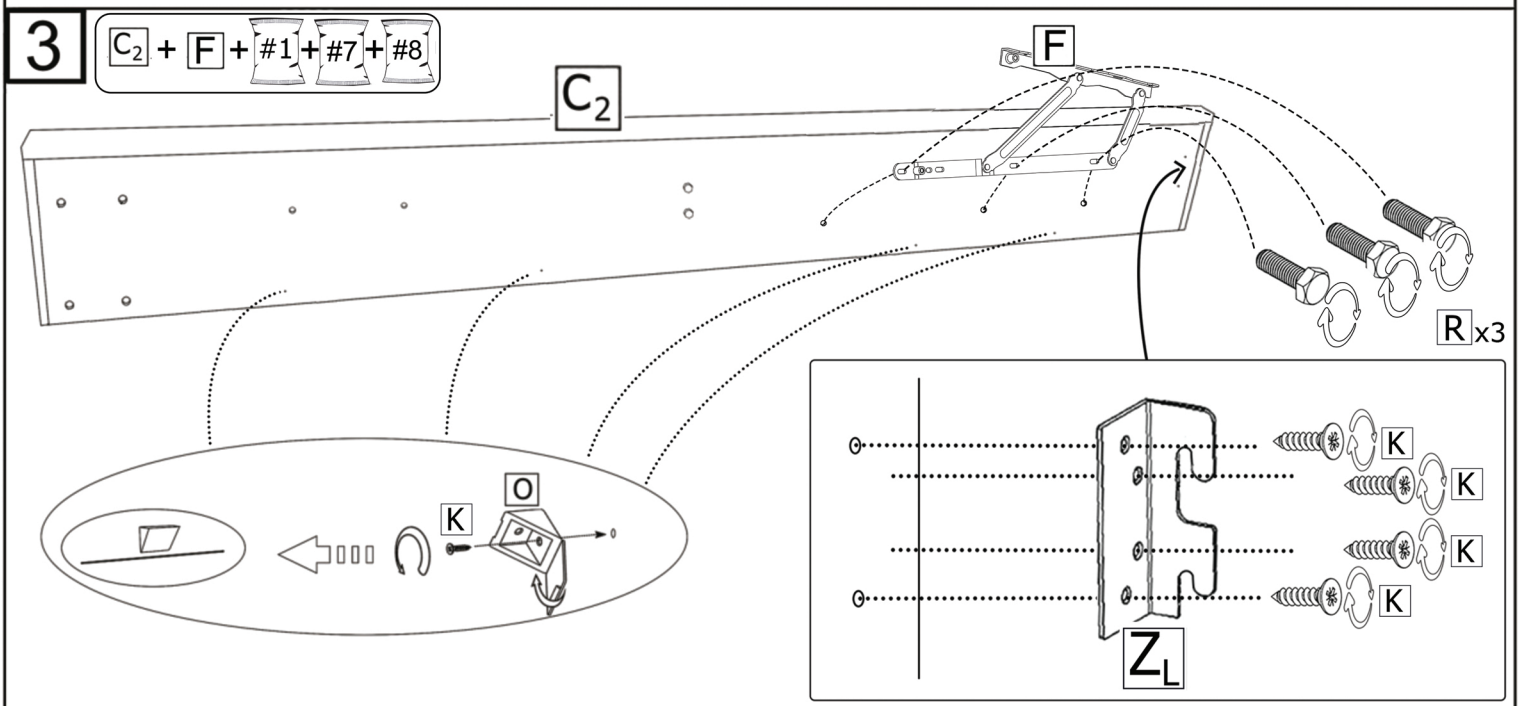

4

X + M + J + H + #8

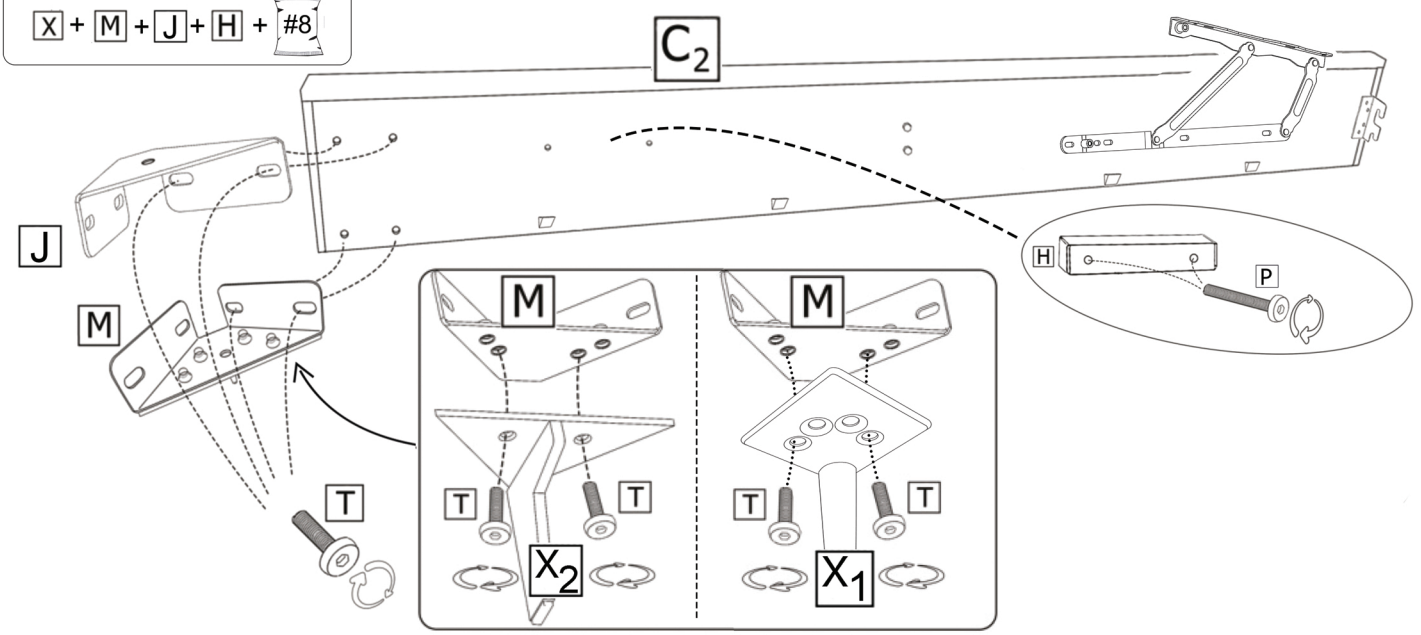

5

B + H + #7 + #8

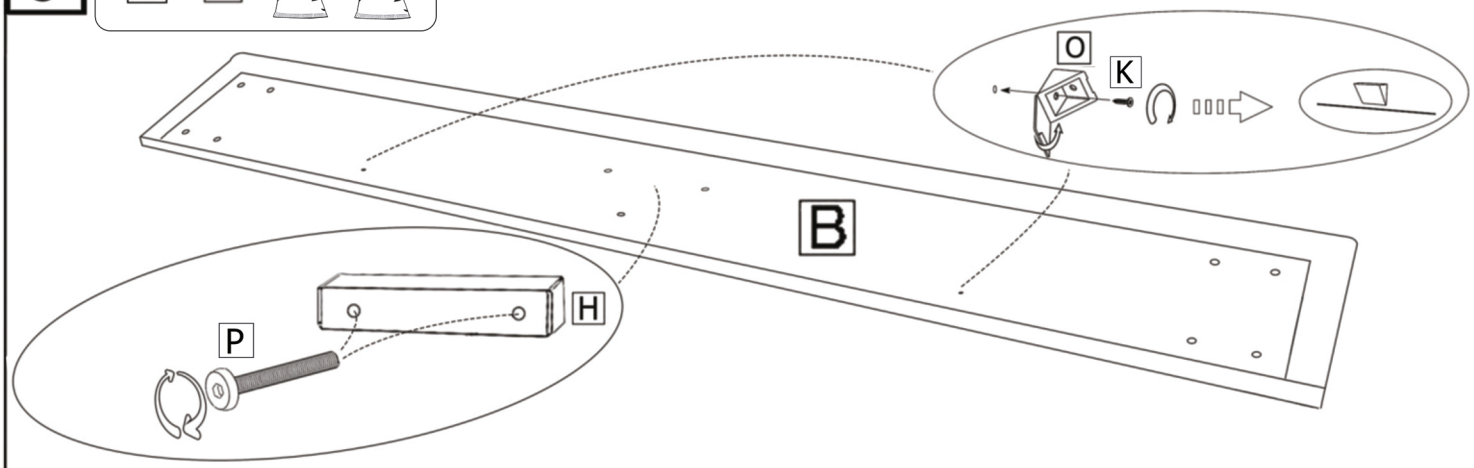

6

G + #1 + #3

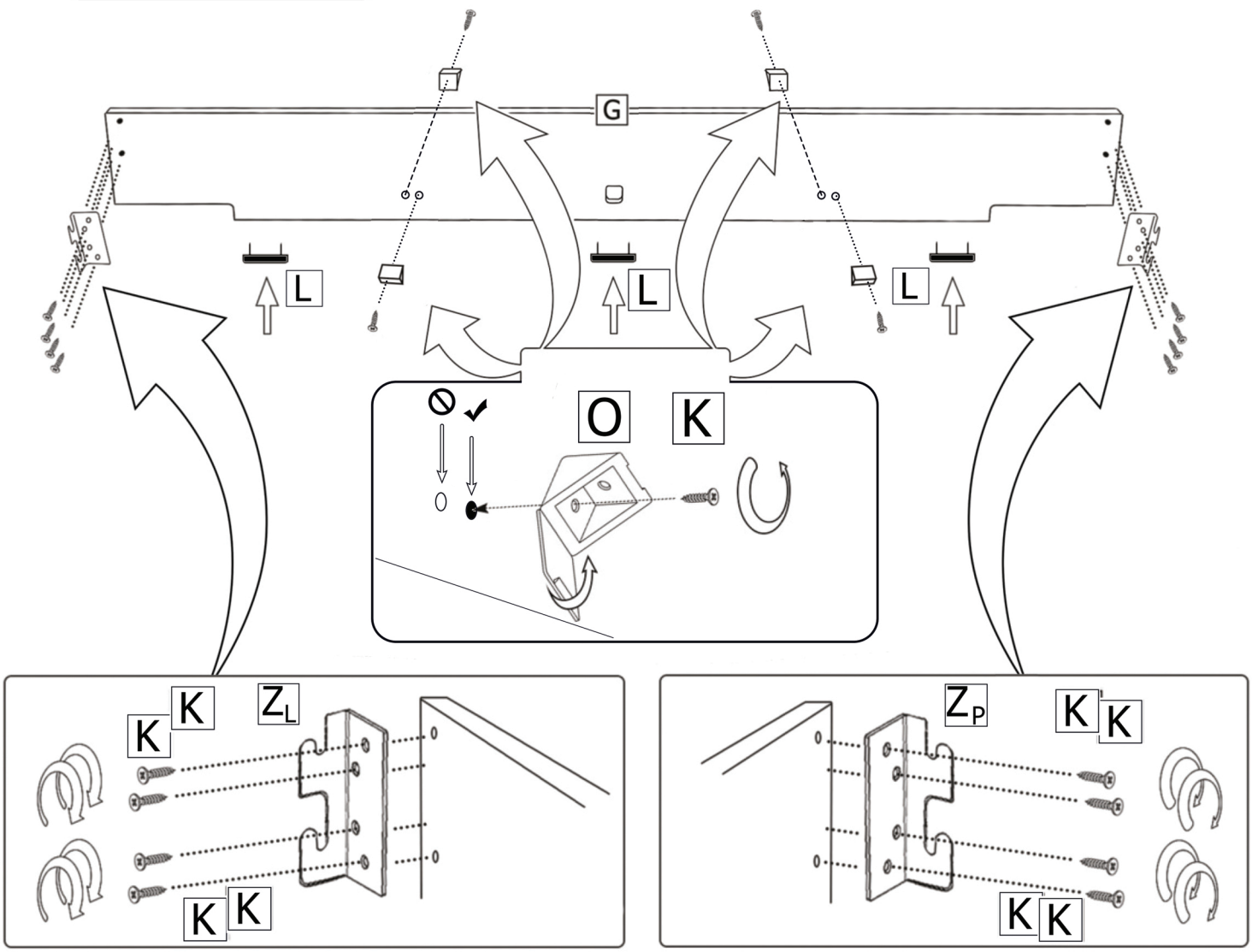

7

I + A + #8

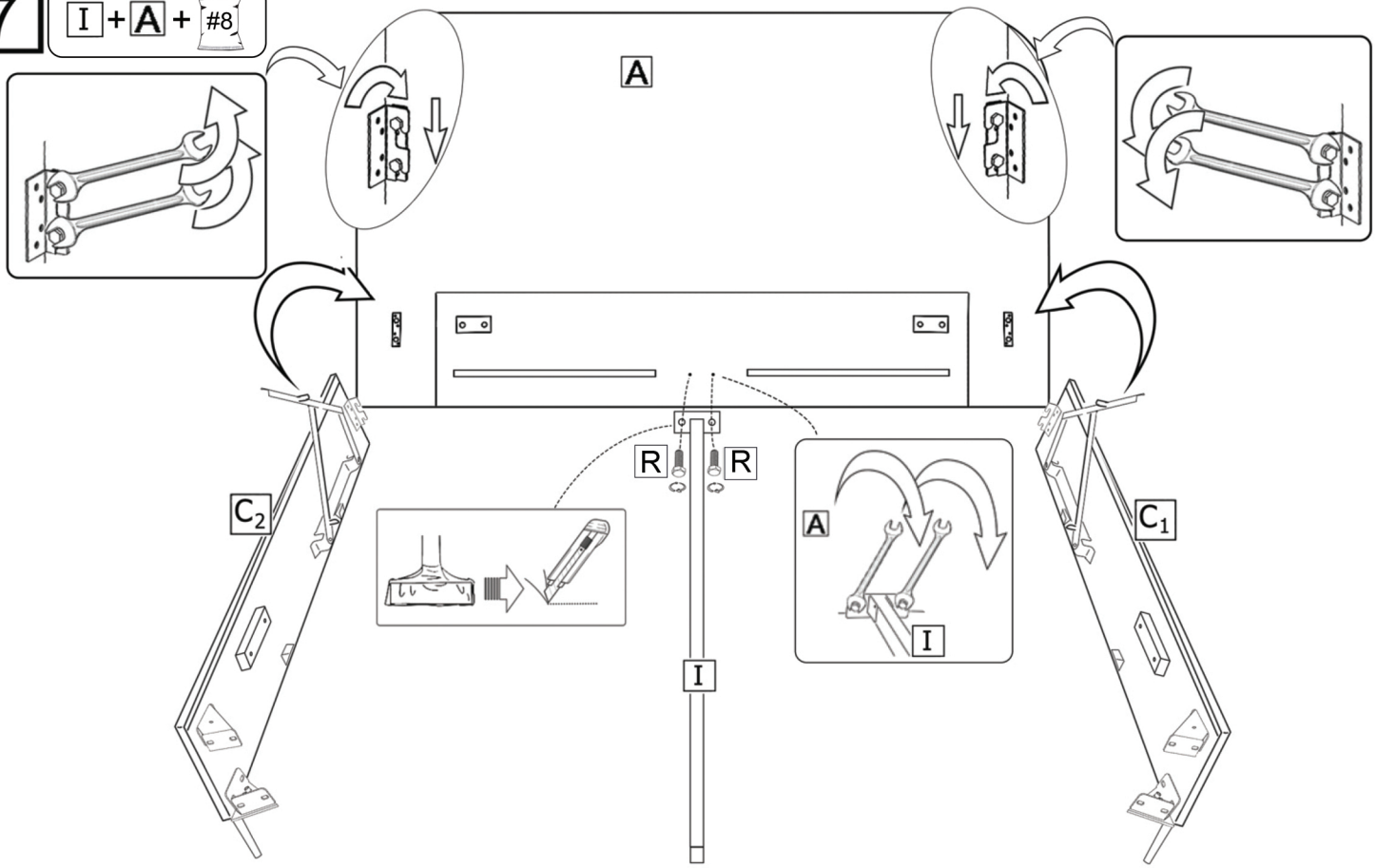

8

E

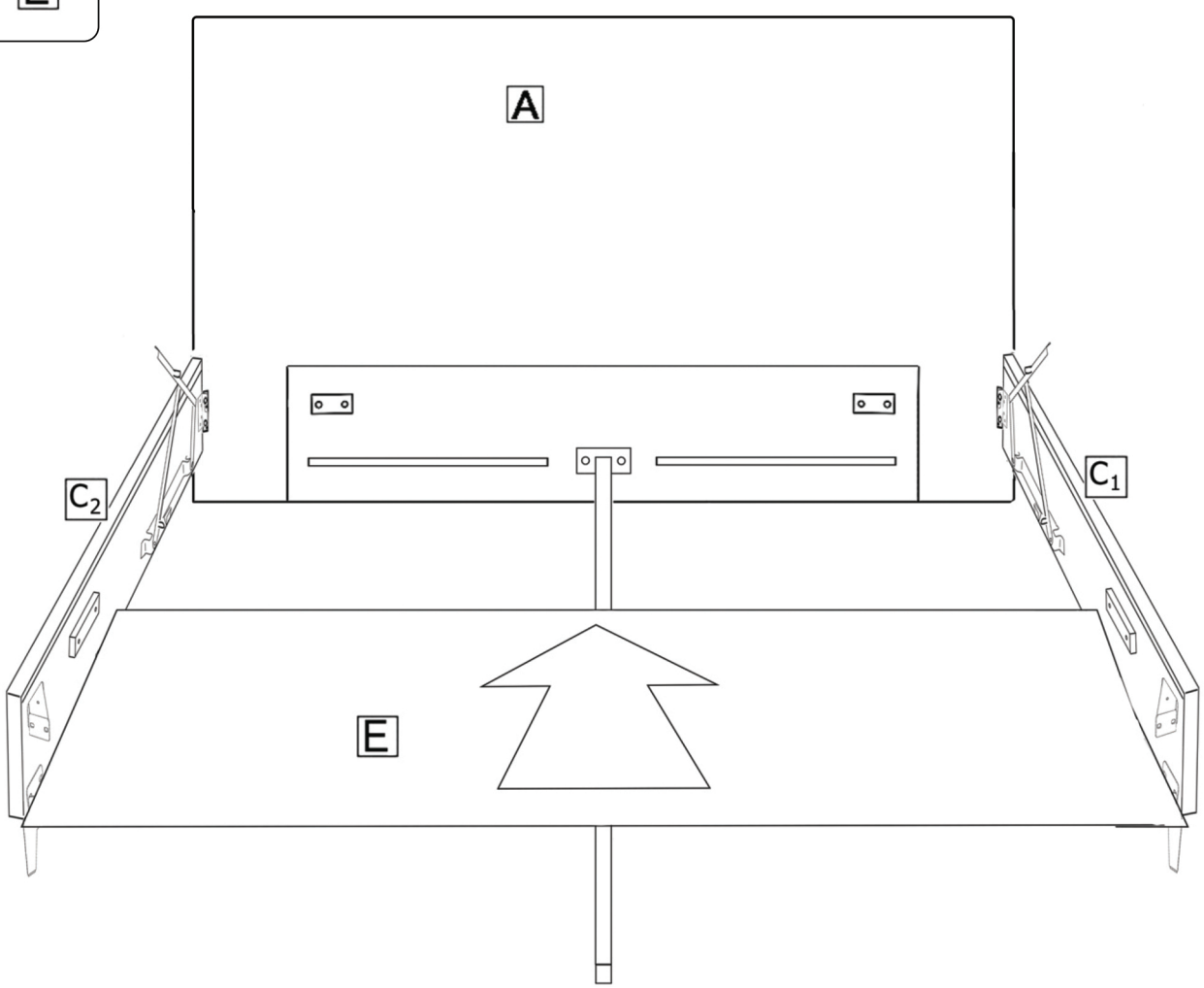

9

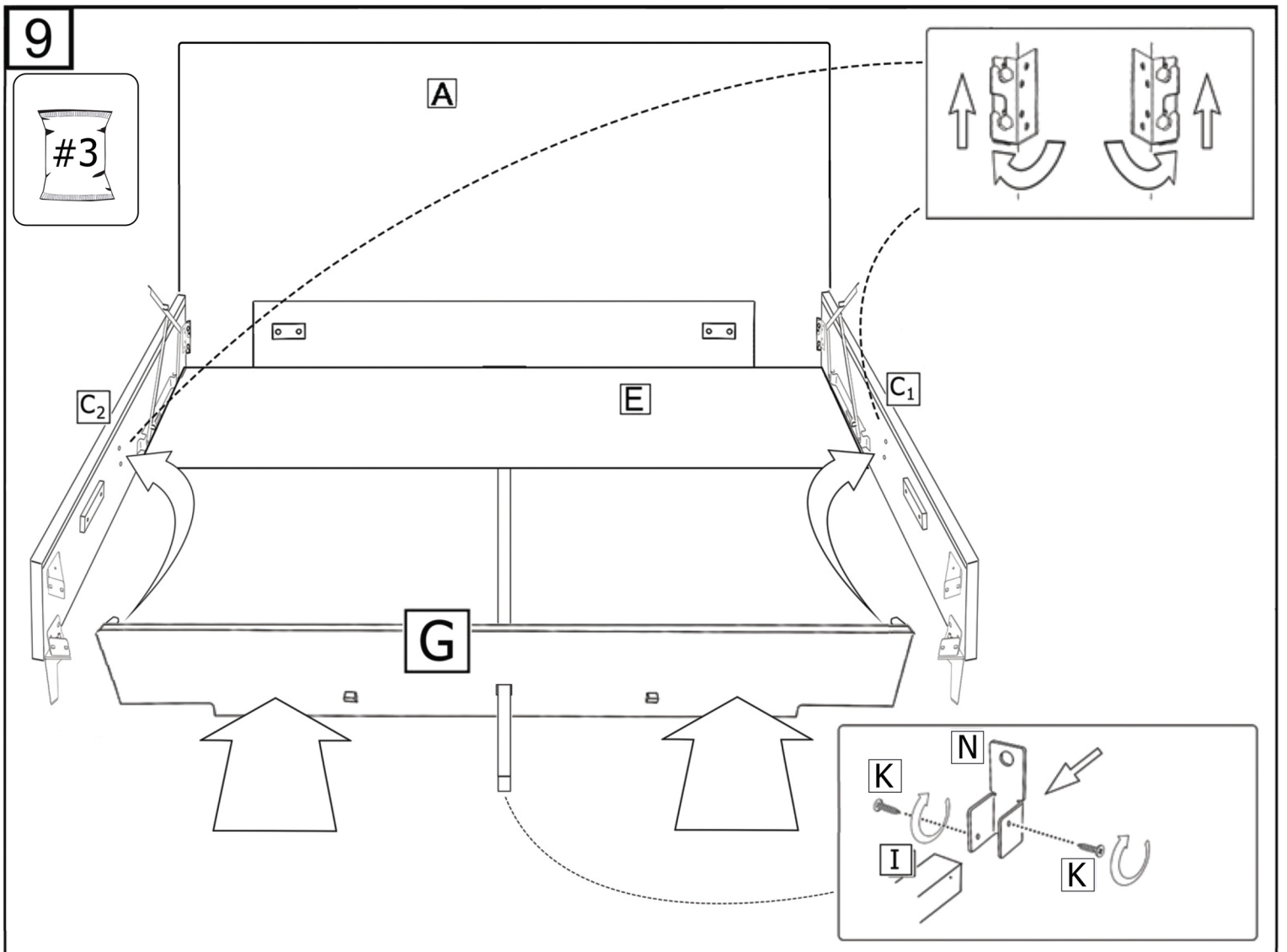

10

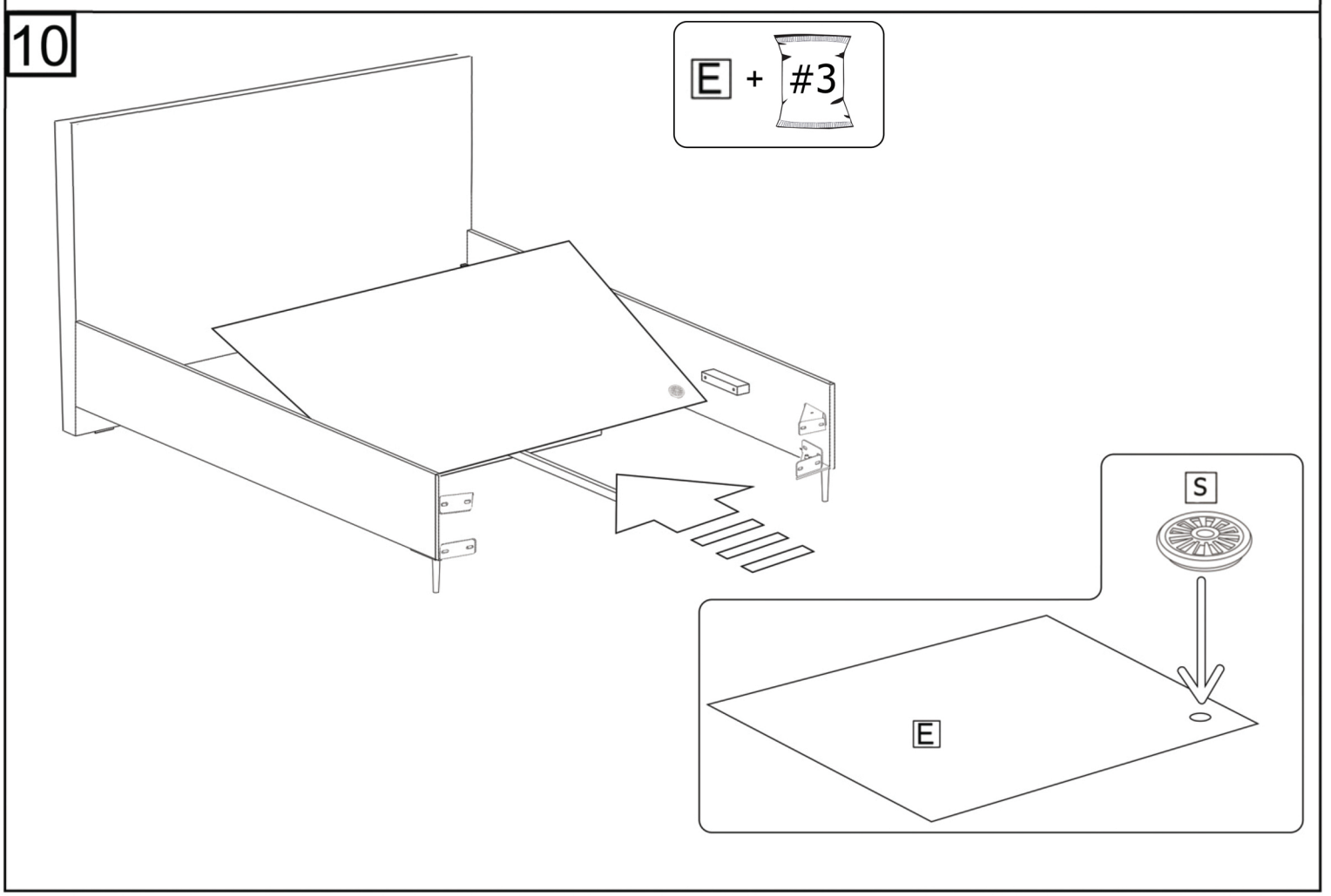

11

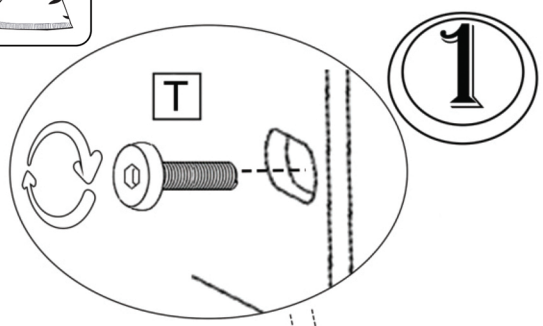

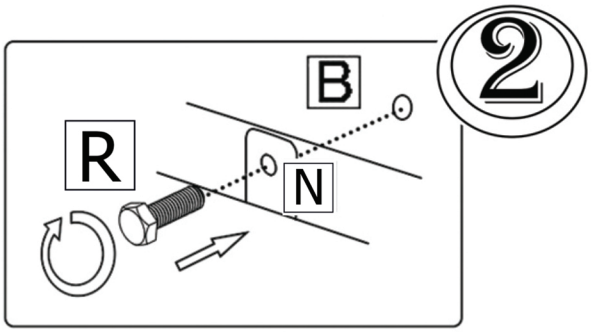

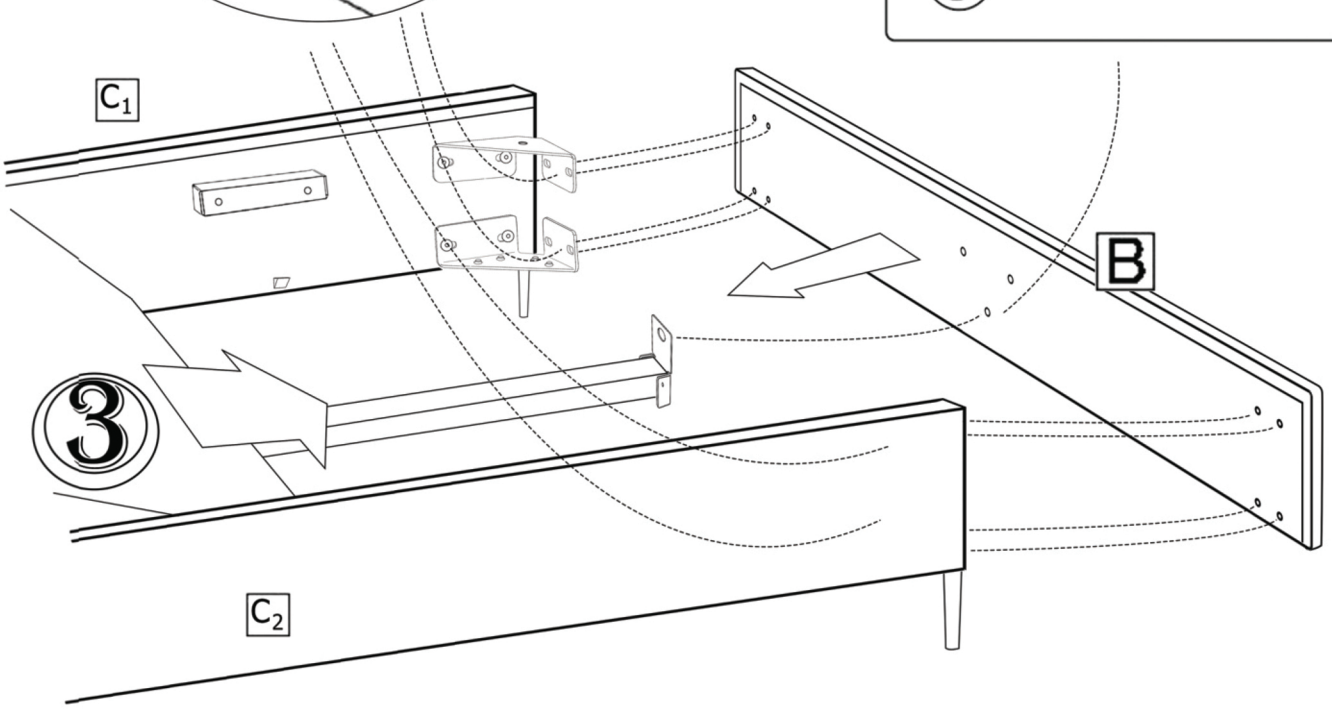

12

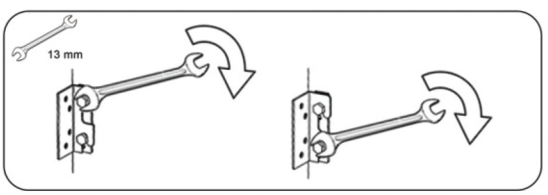

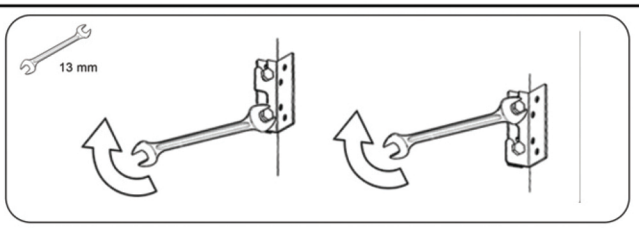

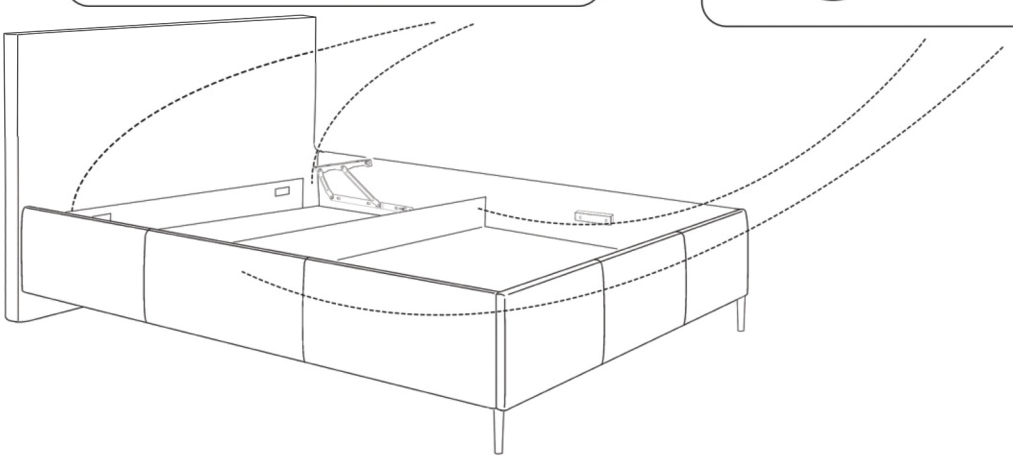

13

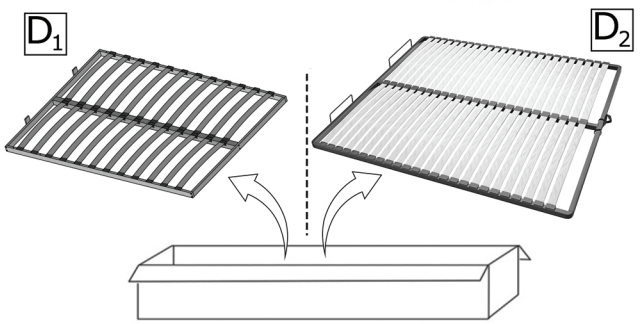

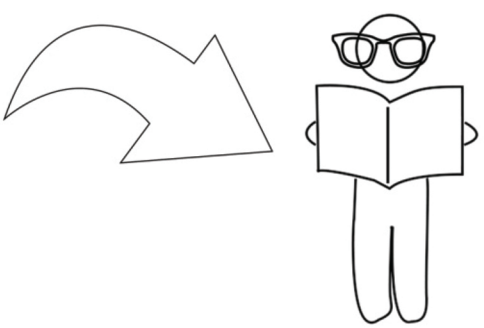

14

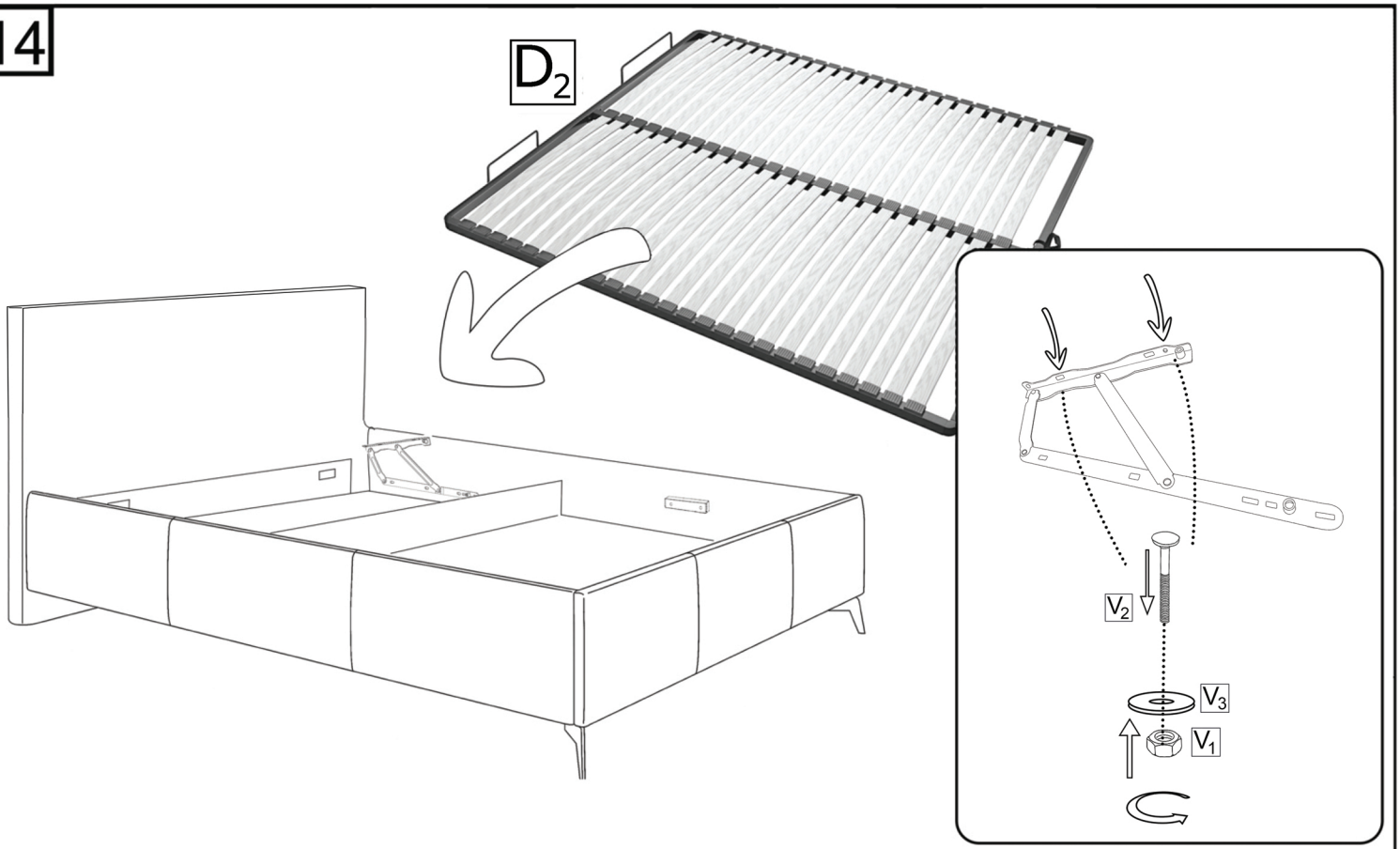

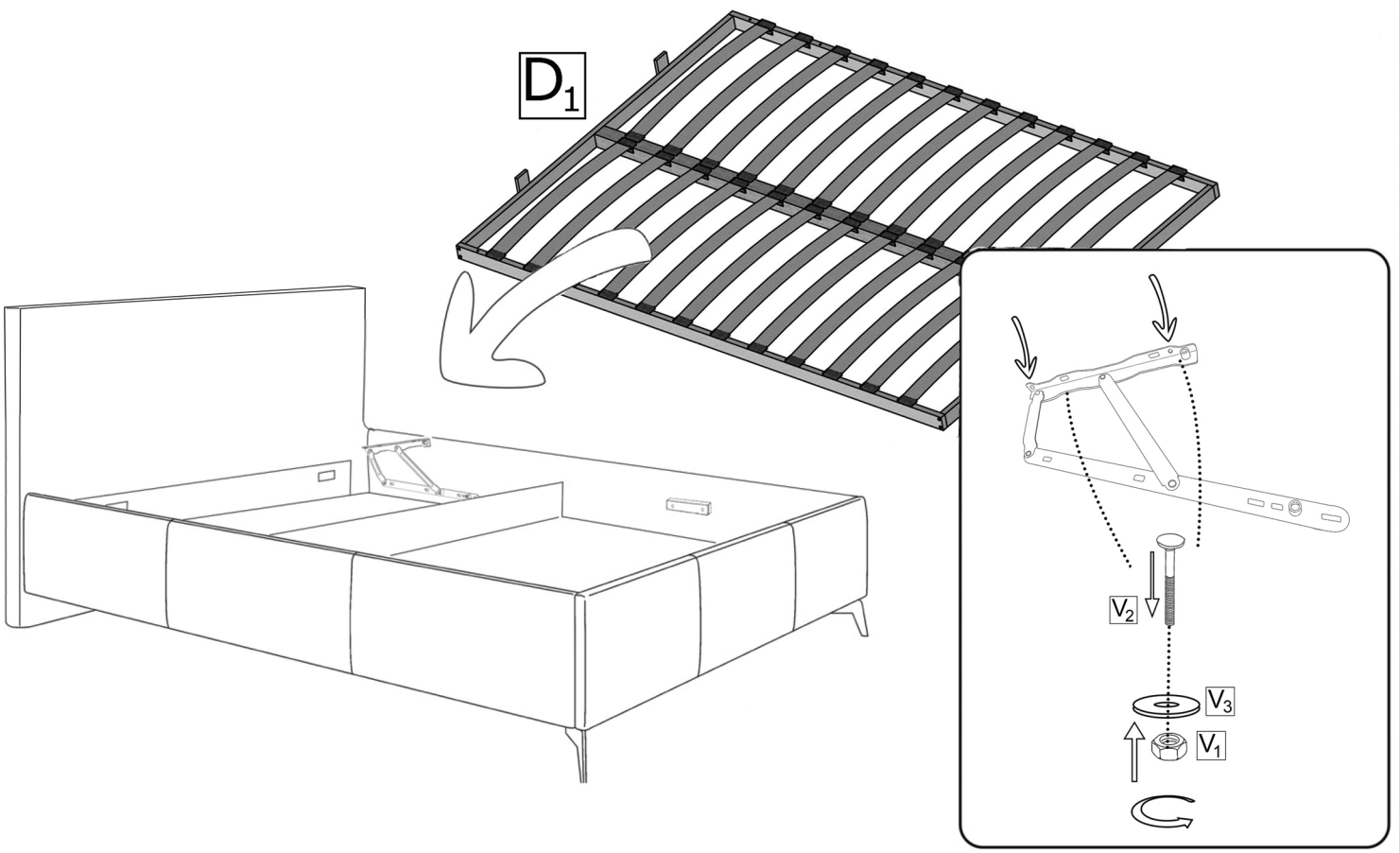

#5

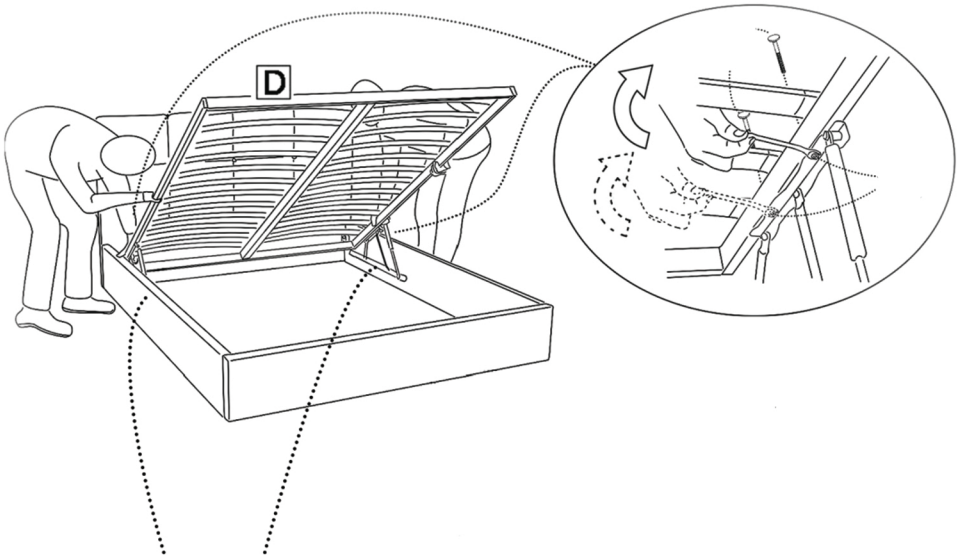

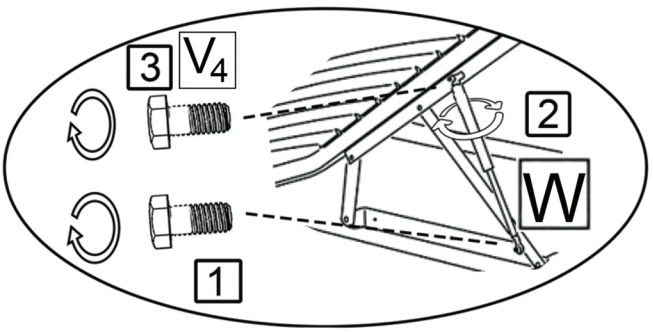

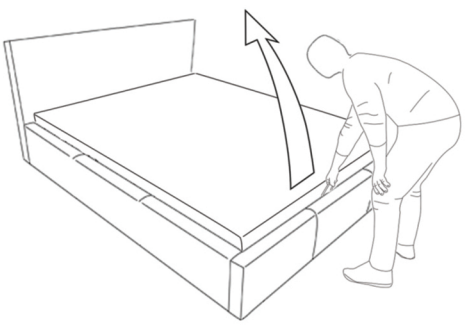

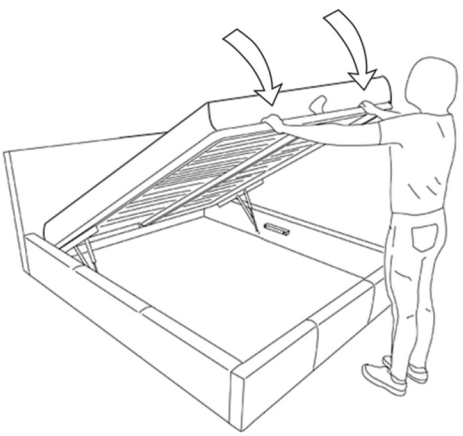

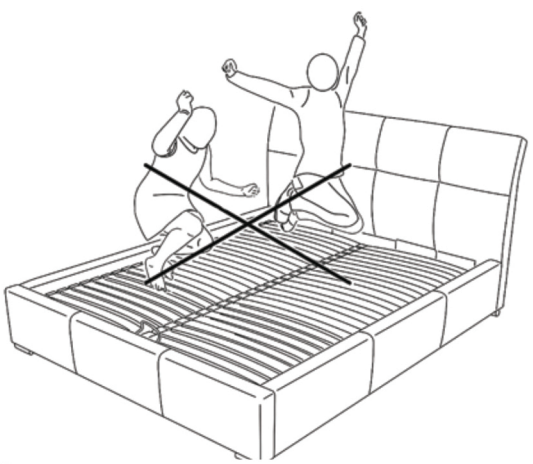

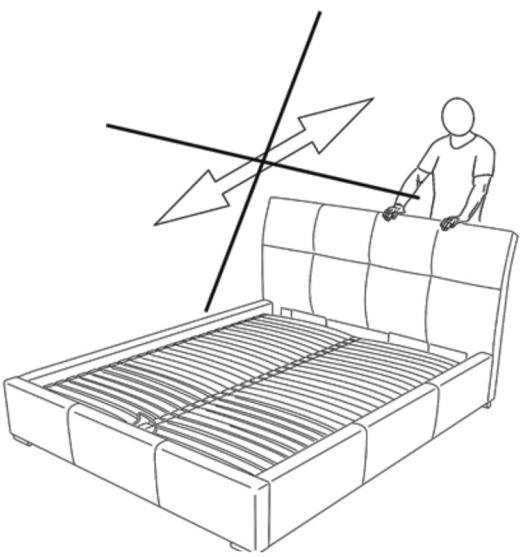

FR
Donnez ou recyclez vos meubles.
Association ou Magasin ou Déchèterie
https://quefairedemesdechets.fr

BASIC+

INSTRUCKJA MONTAŻU /
ASSEMBLY INSTRUCTION /
MONTAGEANLEITUNG

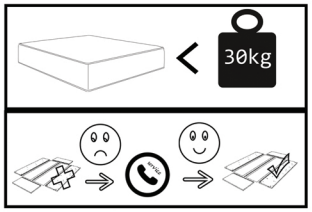

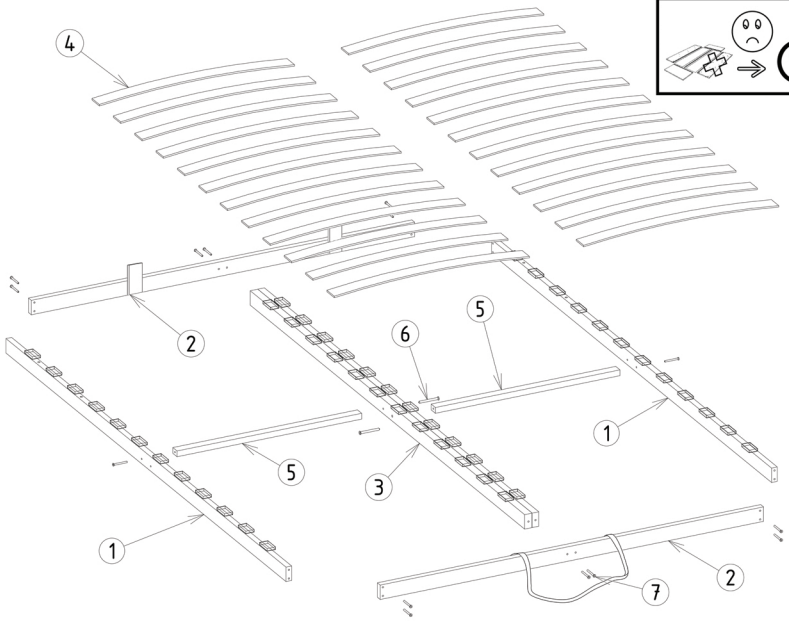

1 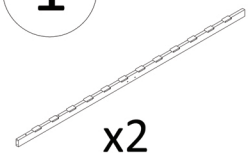 x2	2 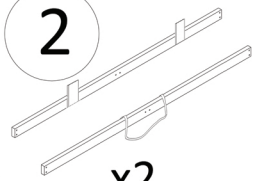 x2	3 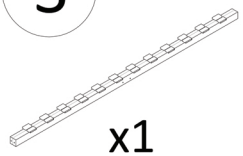 x1
4 x24	5 x2	6 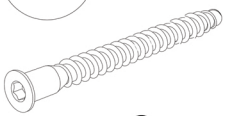 x2
7 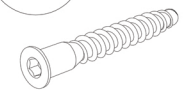 x14	x1	

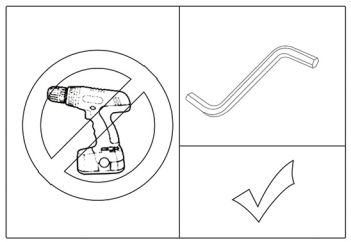

1

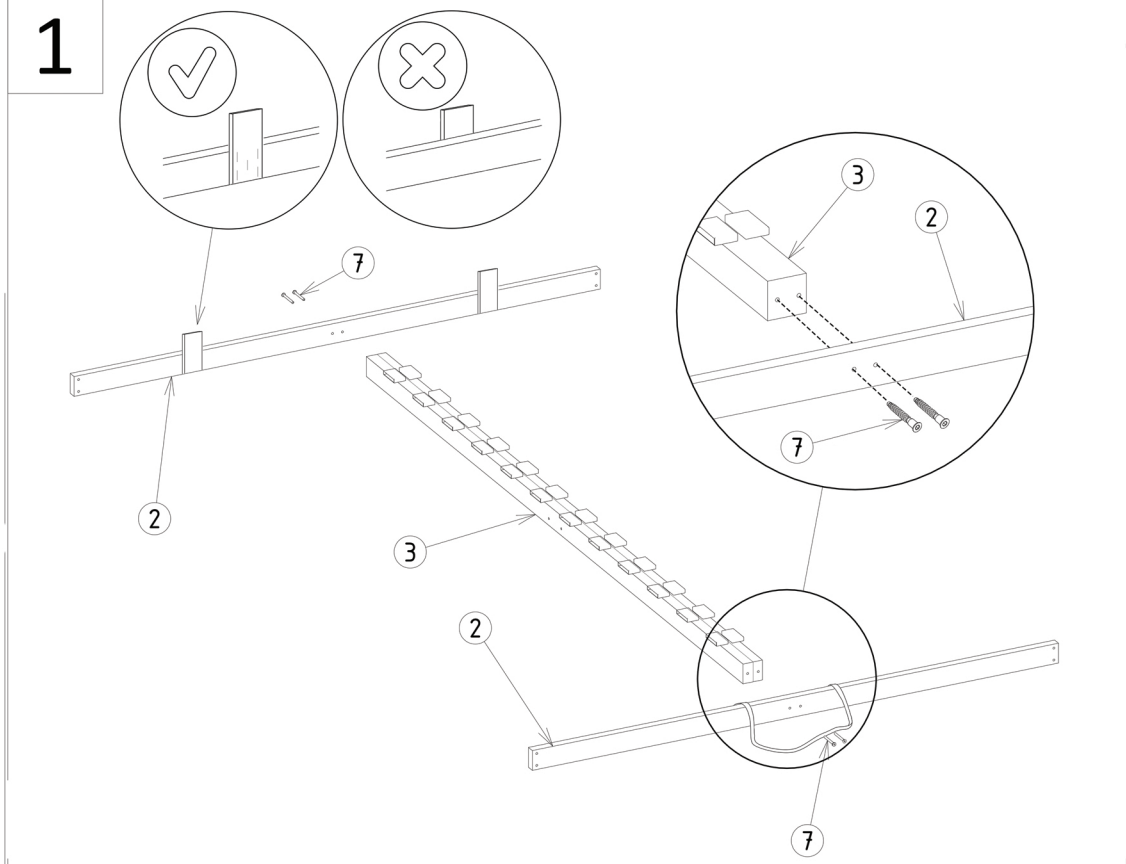

2

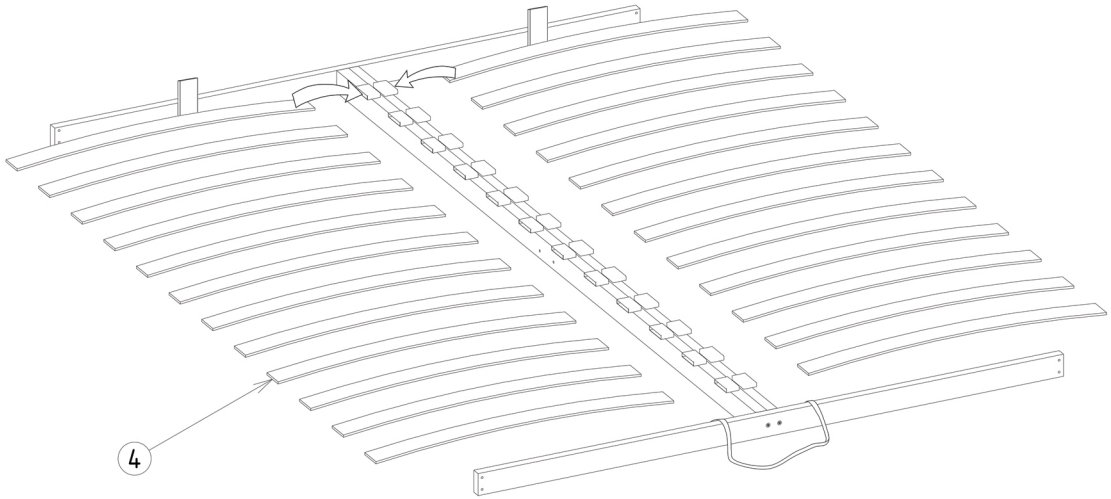

3

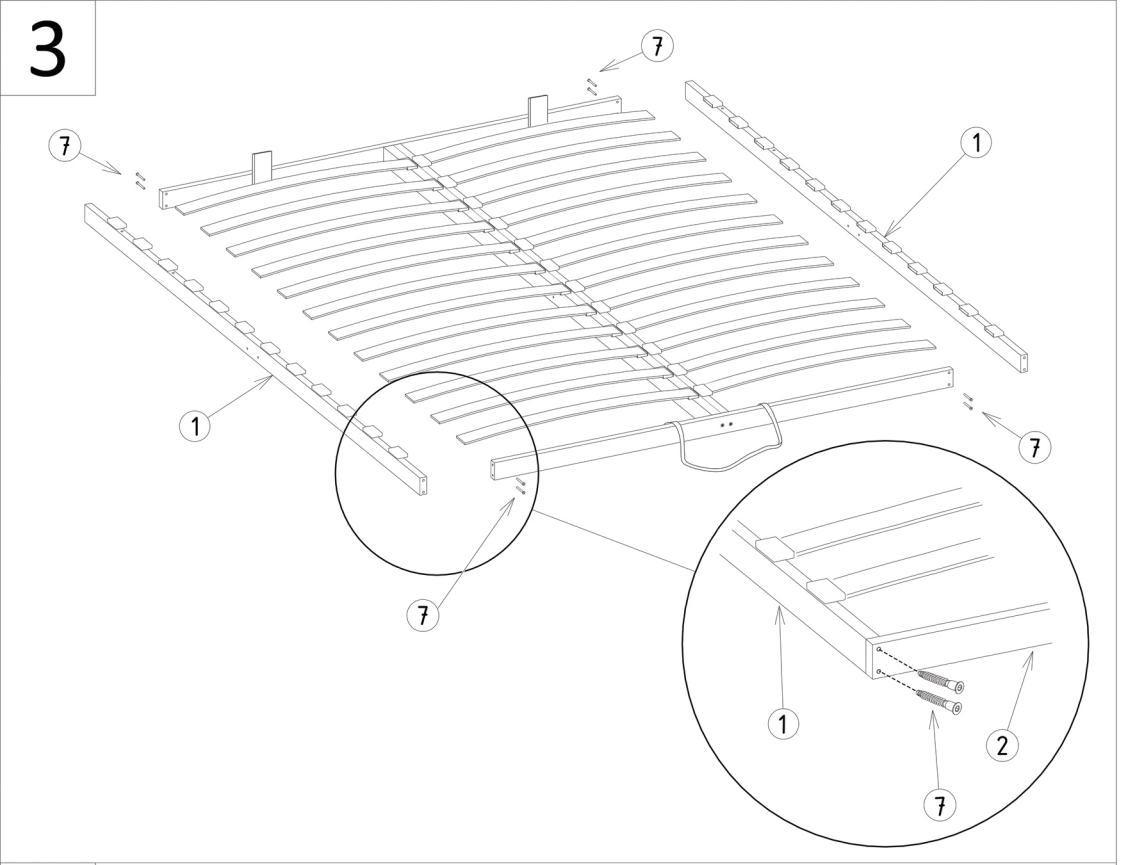
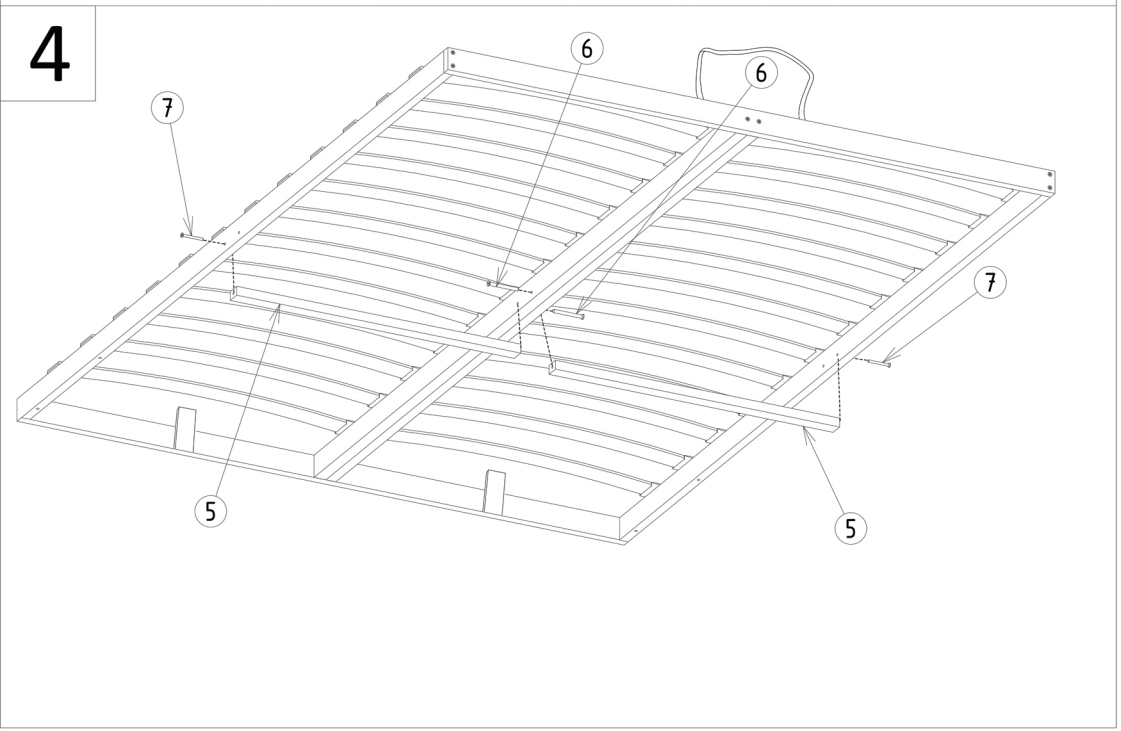
4