INSTRUKCJA MONTAŻU / ASSEMBLY INSTRUCTIONS

# MALWA M2

| | | | |
|---|---|---|---|
| Mebel należy montować na miękkim podłożu | Mebel należy konserwować typowymi środkami do konserwacji mebli | Furniture should be assembled on the soft surface | Piece of furniture should be preserved by the typical furniture care substances |

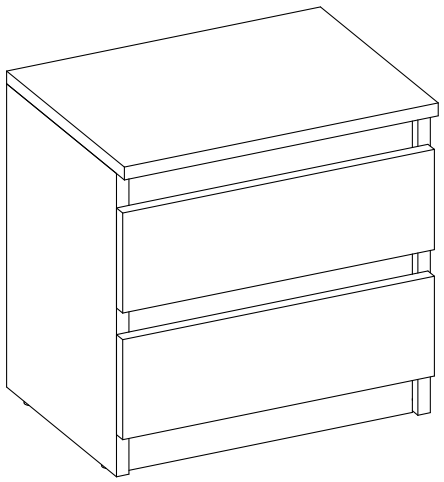

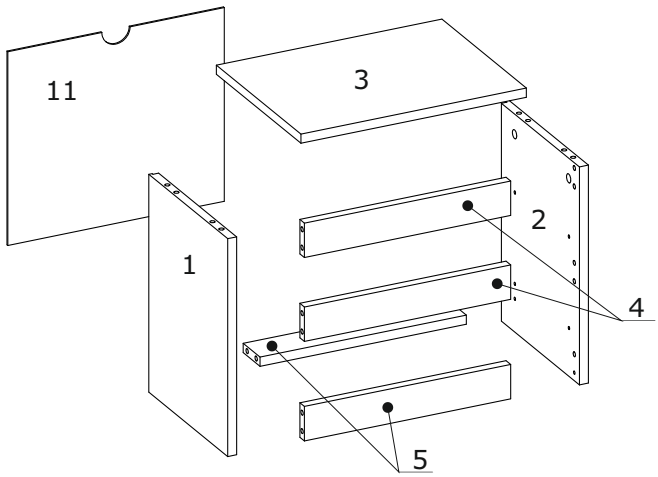


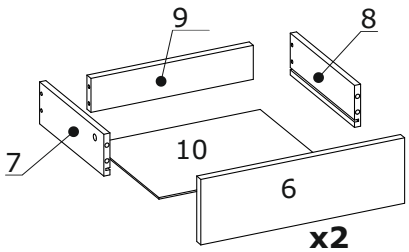


OKUCIE: / FITTINGS:

| | | | | |
|---|---|---|---|---|
| B1 8x35 x16 | M1 12x15 x8 | T1 x12 | S5 3,5x16mm x1 | R23 250mm x2 |
| K5 x4 | M4 10x12 x4 | G2 1,4x25mm x18 | T19 x1 | |
| S7 6,3x13mm x8 | L1 x1 | F36 x4 | T20 x1 | |
| S6 4 x 16 mm x8 | S8 3 x 20 mm x8 | K3 6x40 x8 | | |







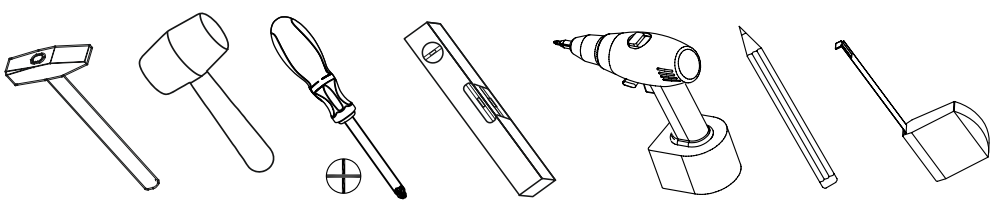

1

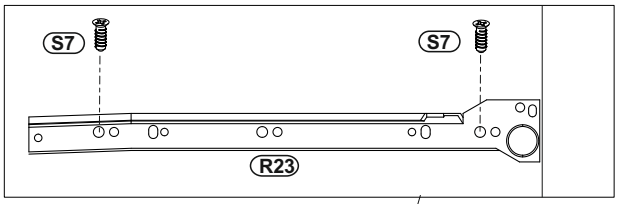
S7
S7
R23

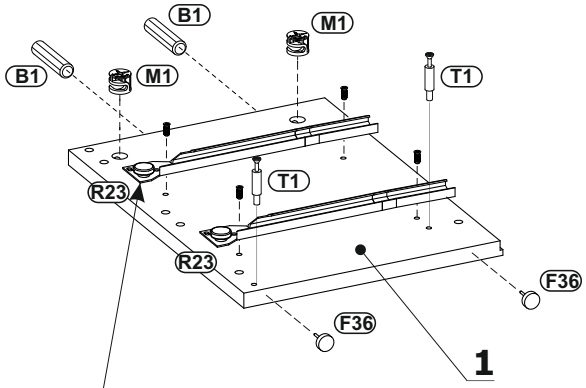
B1
M1
B1
M1
T1
R23
T1
R23
F36
F36
1

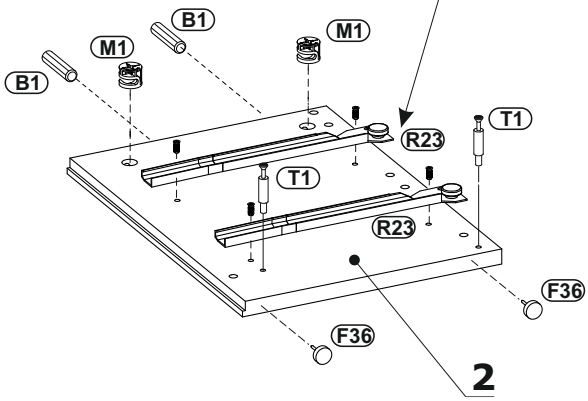
B1
M1
M1
B1
T1
R23
T1
R23
F36
F36
2

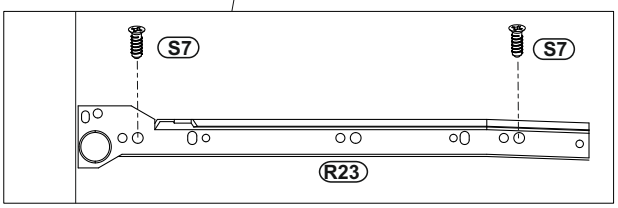
S7
S7
R23

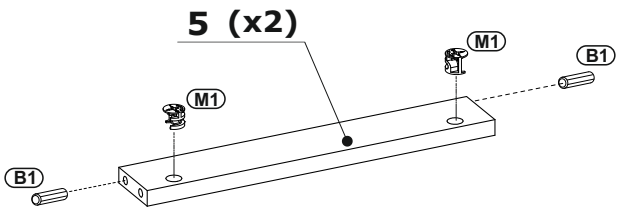
5 (x2)
M1
B1
M1
B1

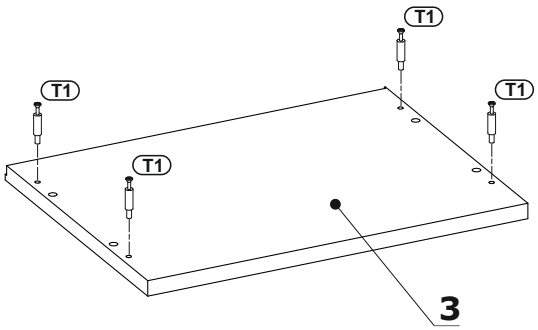
T1
T1
T1
T1
3

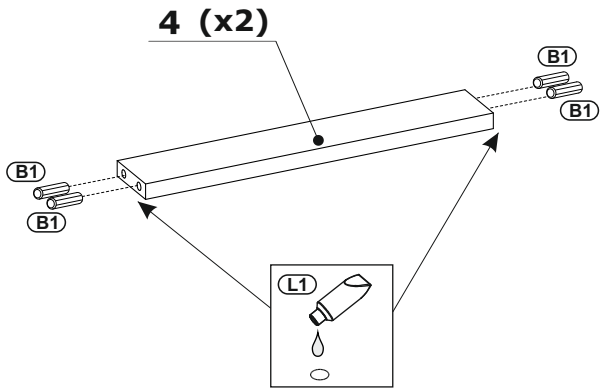
4 (x2)
B1
B1
B1
B1
L1

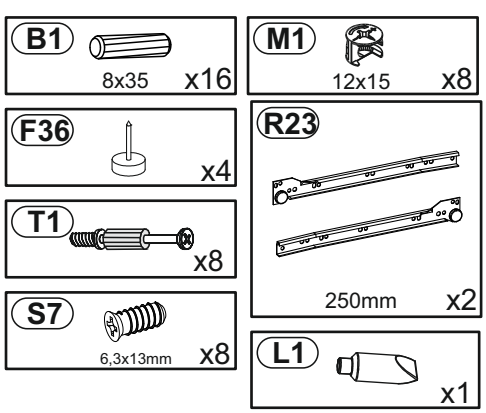
B1
8x35
x16
M1
12x15
x8
F36
x4
T1
x8
S7
6,3x13mm
x8
R23
250mm
x2
L1
x1

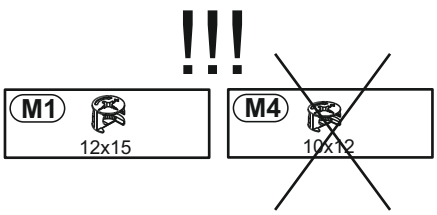
!!!
M1
12x15
M4
10x12

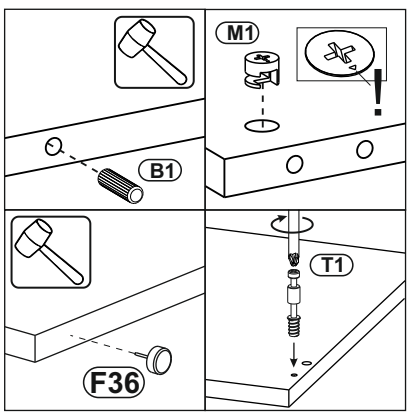
M1
!
B1
T1
F36

## 2

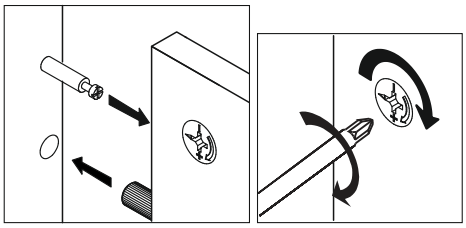

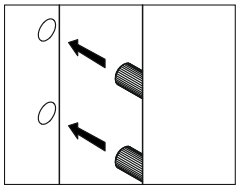

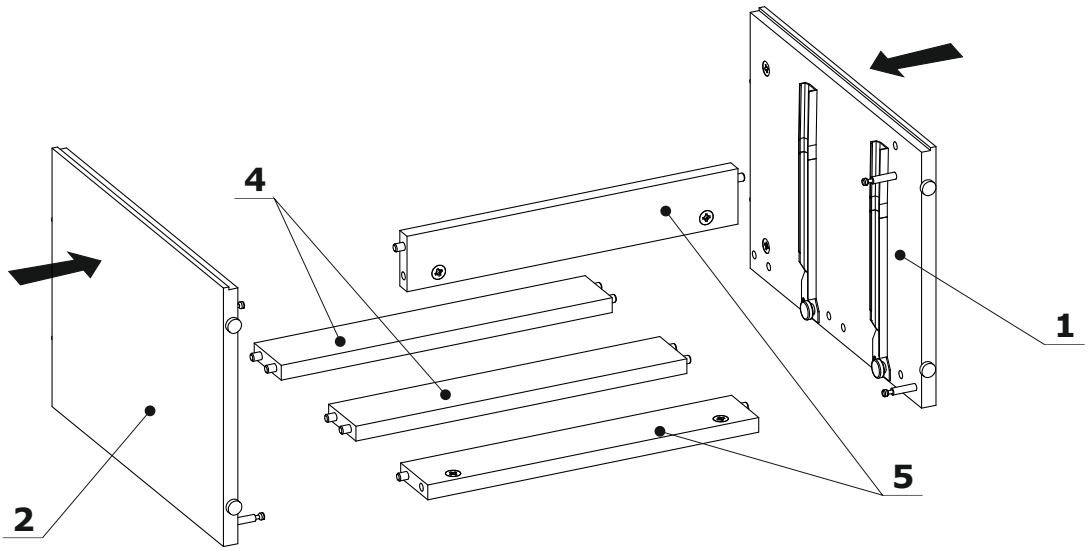


## 3

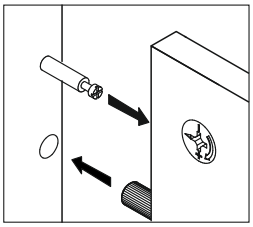

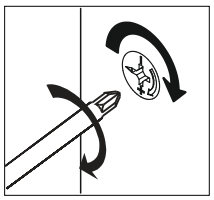

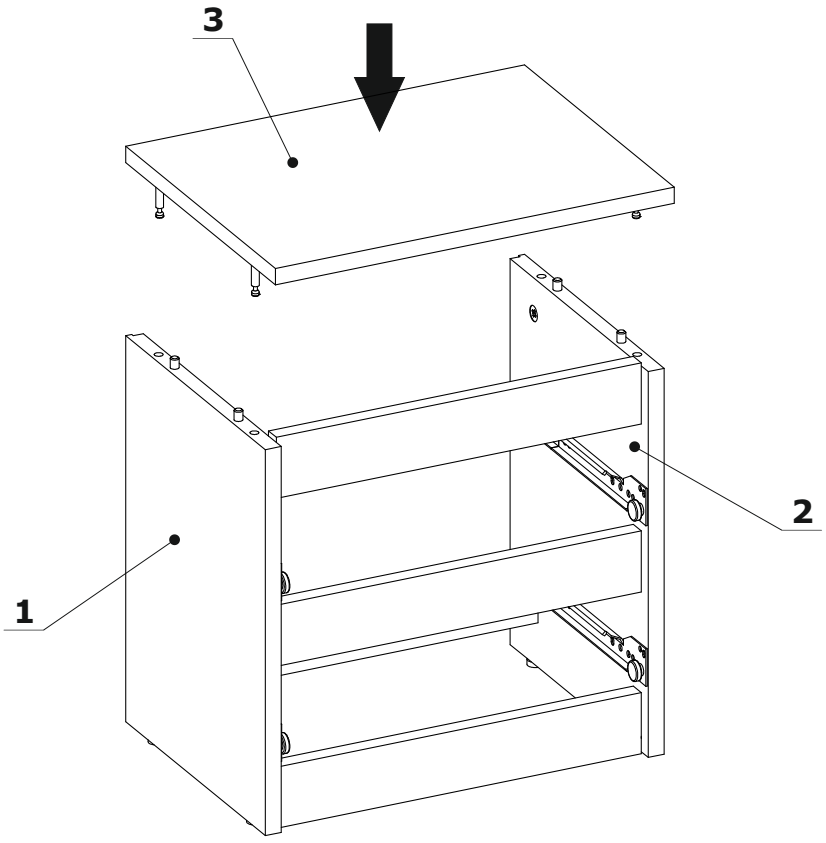

4

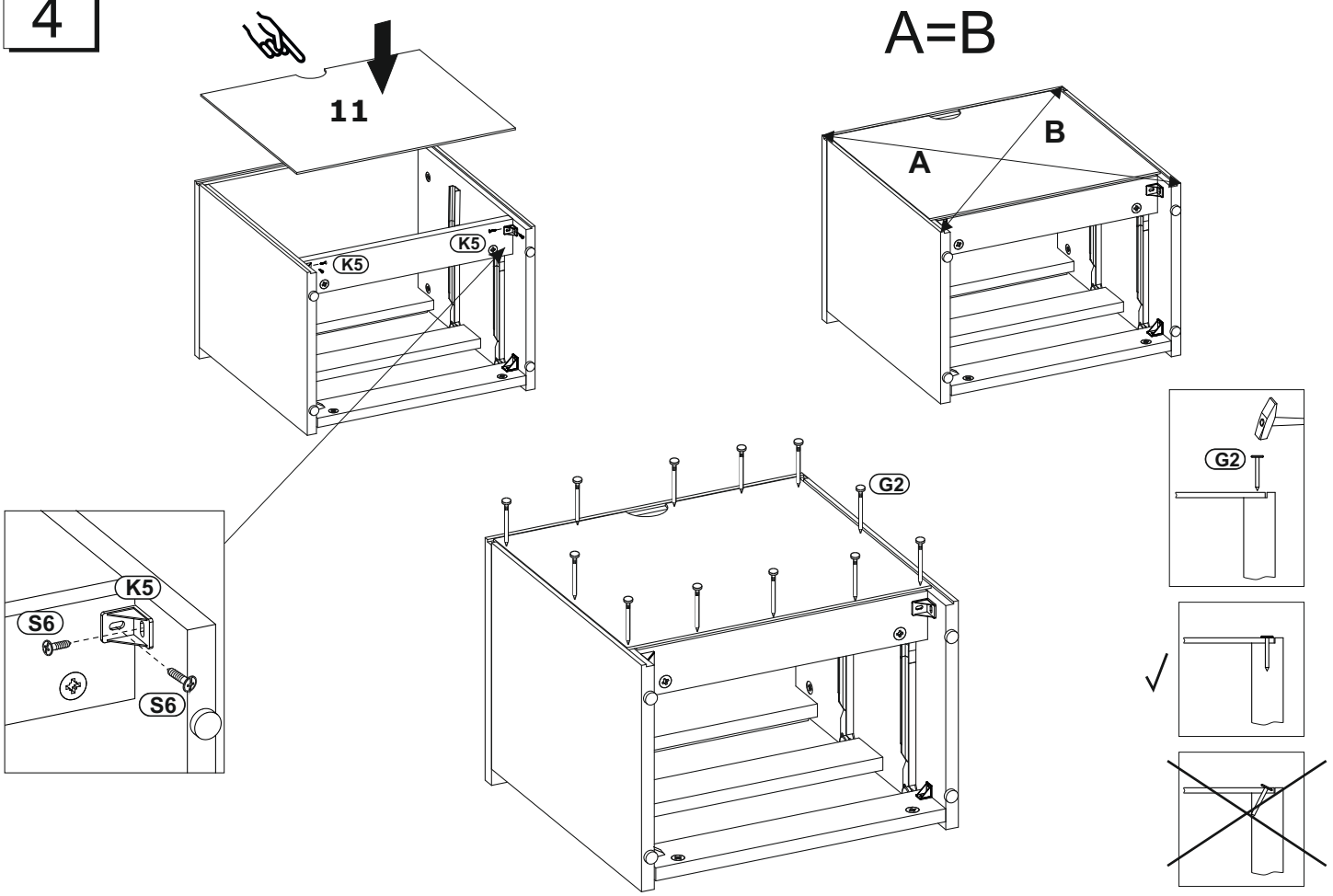
11
K5
K5
A=B
A
B
G2
K5
S6
S6
G2

5

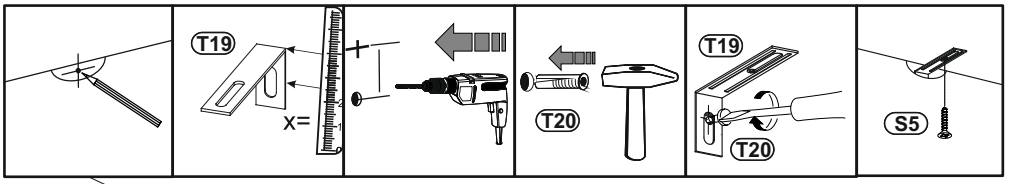
T19
x=
T20
T19
T20
S5

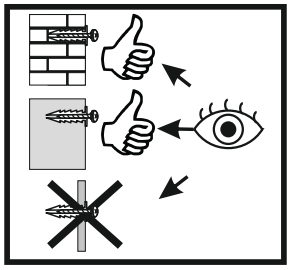

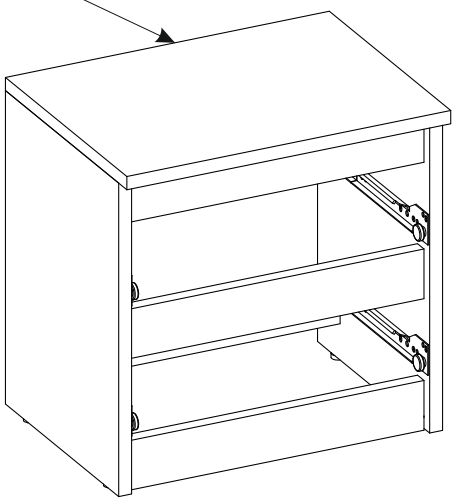

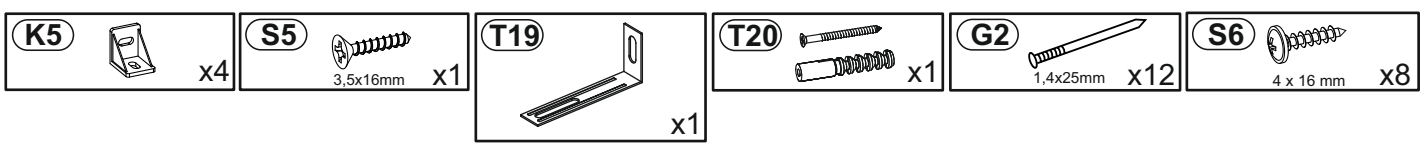
K5
x4
S5
3,5x16mm
x1
T19
x1
T20
x1
G2
1,4x25mm
x12
S6
4 x 16 mm
x8

# 6

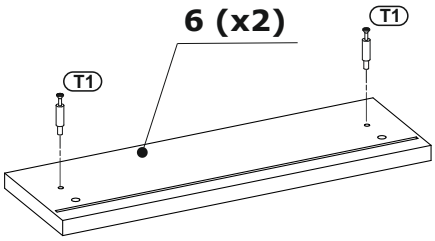
6 (x2)
T1
T1

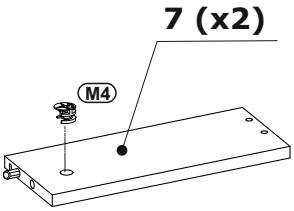
7 (x2)
M4

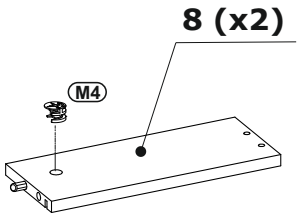
8 (x2)
M4

# 7

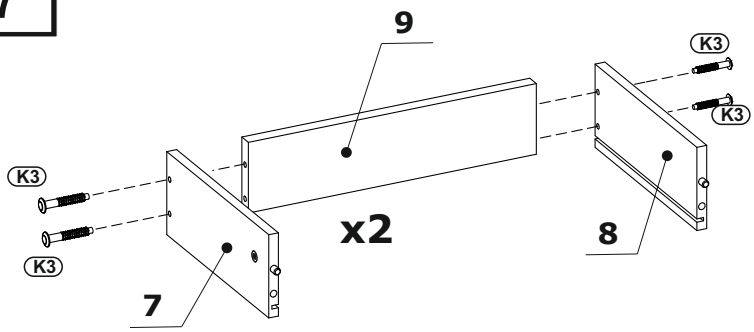
9
K3
K3
K3
K3
x2
8
7

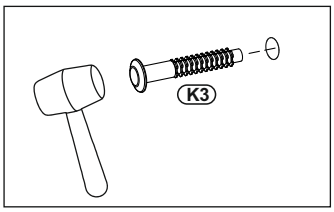
K3

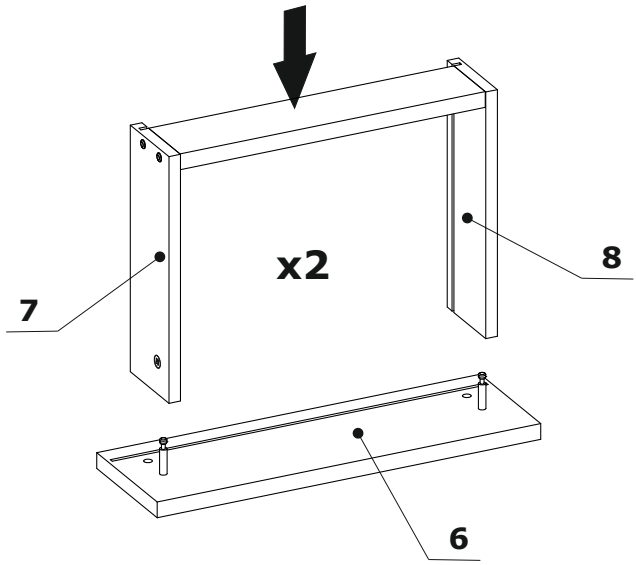
x2
8
7
6

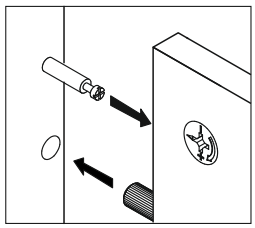

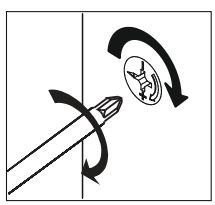

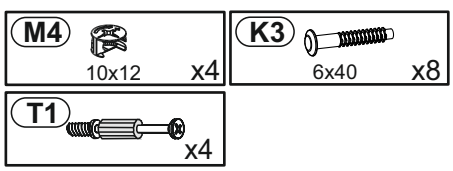
M4
10x12
x4
K3
6x40
x8
T1
x4

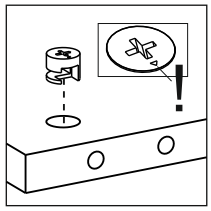

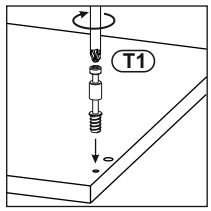
T1

# 8

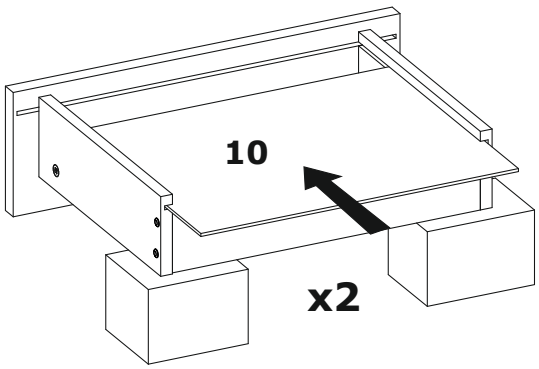
10
x2

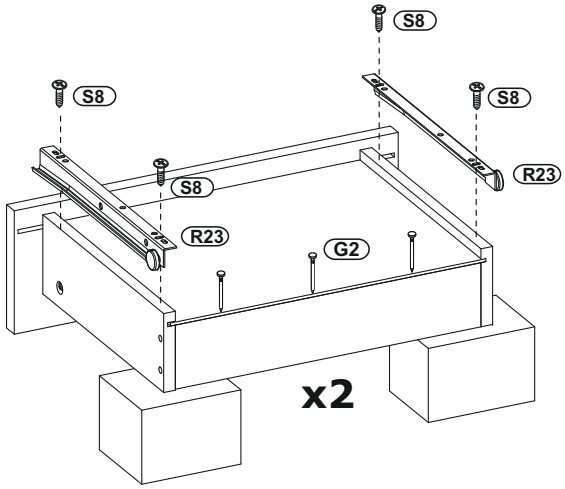
S8
S8
S8
S8
R23
R23
G2
x2

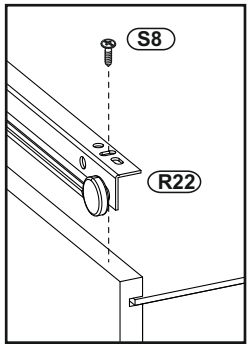
S8
R22

# 9

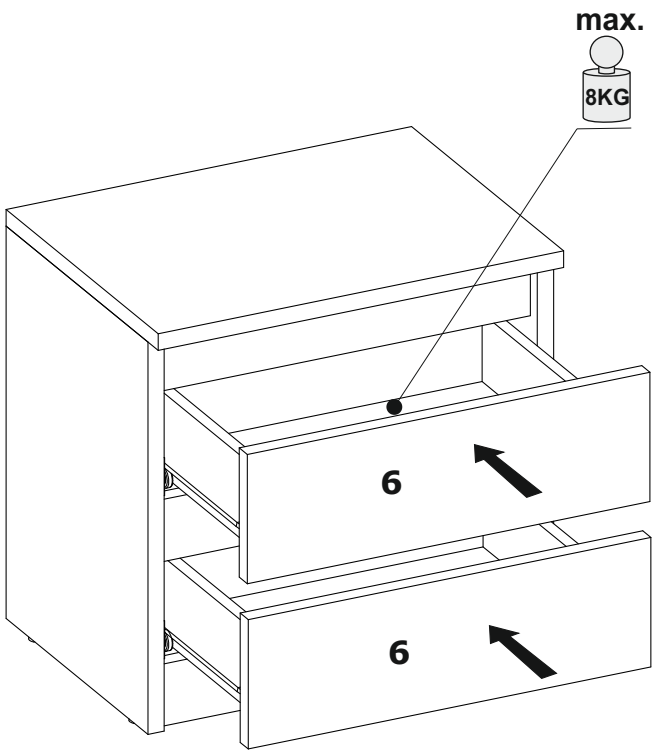
max.
8KG
6
6

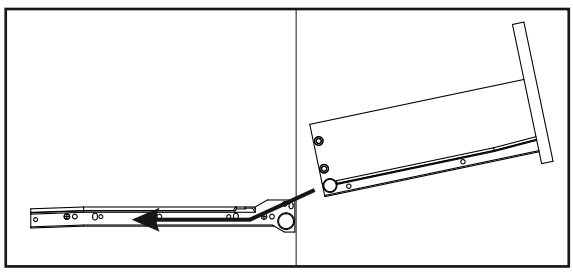

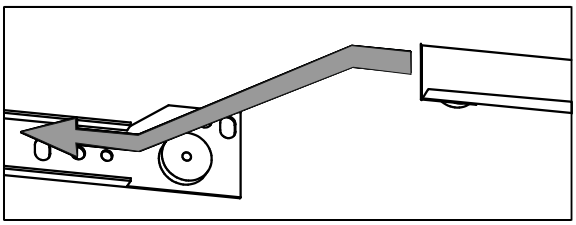

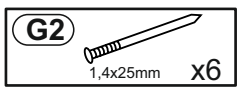
G2
1,4x25mm
x6

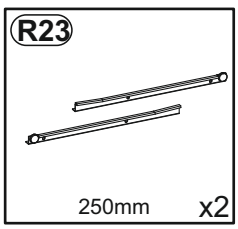
R23
250mm
x2

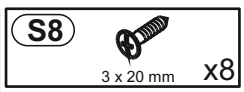
S8
3 x 20 mm
x8