ASSEMBLY INSTRUCTION

CF 26
2 Sliding Box

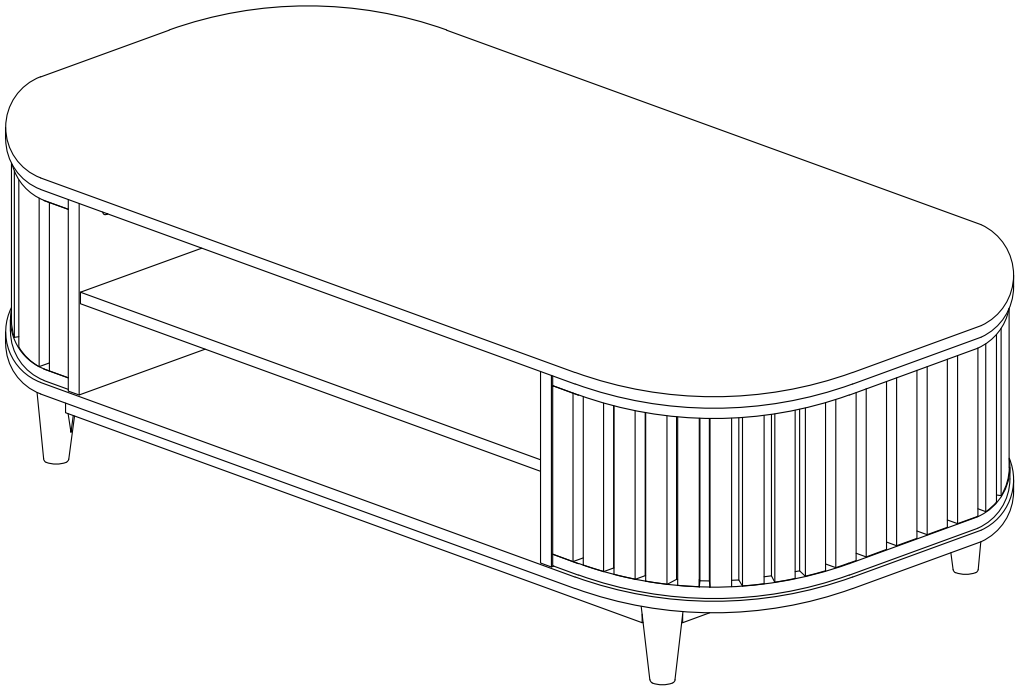

ASSEMBLY INSTRUCTION

CF 26
2 Sliding Box

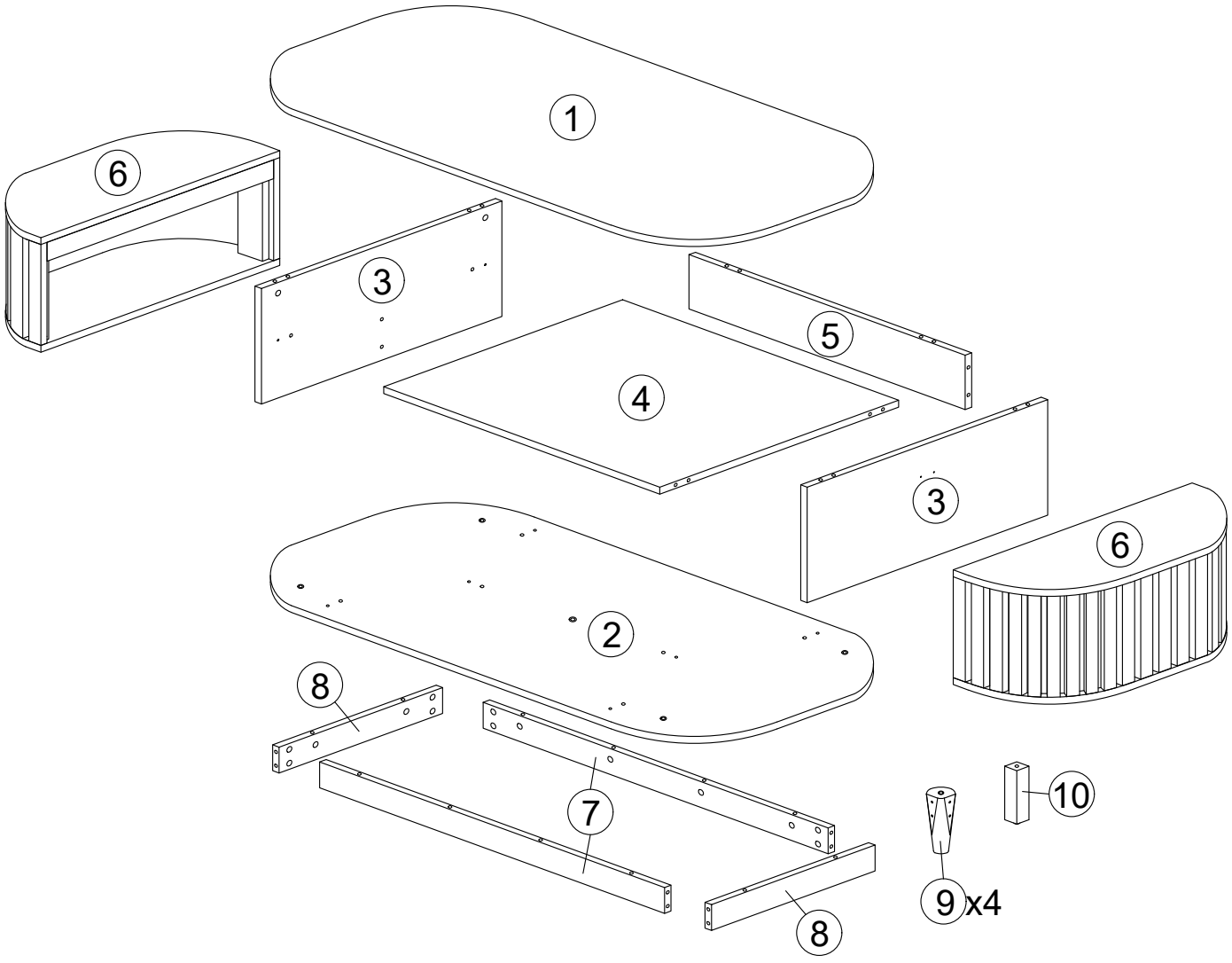

ASSEMBLY INSTRUCTION

CF 26
2 Sliding Box

PART LIST

1	2	3	4
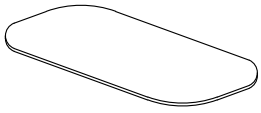	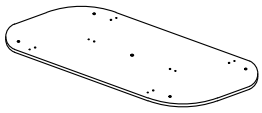	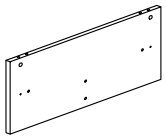	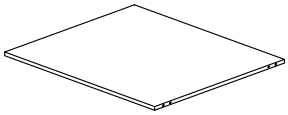
Top Panel	Bottom Panel	Side Panel L/R	Middle Panel
1 PC	1 PC	2 PCS	1 PC

5	6	7	8
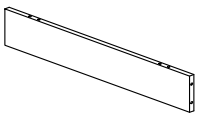	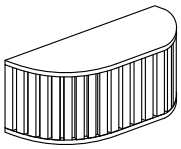	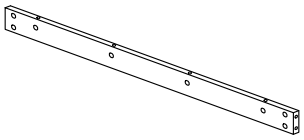	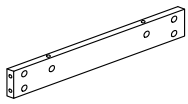
Middle Support	Sliding Box	Leg Support	Leg Support Side
1 PC	2 PCS	2 PCS	2 PCS

9	10
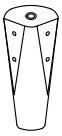	
Side Wooden Leg	Center Wooden Leg
4 PCS	1 PC

HARDWARE LIST

A	B	C	D
			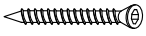
Camlock 15MM	Camlock Bolt 15MM	M8x25MM Wood Dowel	Csk M6x50MM
38 PCS	38 PCS	20 PCS	6 PCS

E	F	G	H
	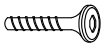	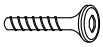	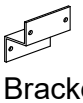
CB Screw M3.5x16MM	M6x30MM JCBC Screw	M8x40MM JCBB Screw	Z Bracket
4 PCS	4 PCS	1 PC	2 PCS

I	J
	
M4 Allen Key	M5 Allen Key
1 PC	1 PC

ASSEMBLY INSTRUCTION

Step 1



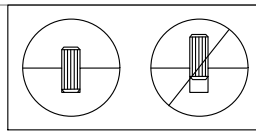

Required/Requis/Requerido	
x20	C
x4	E
x2	H

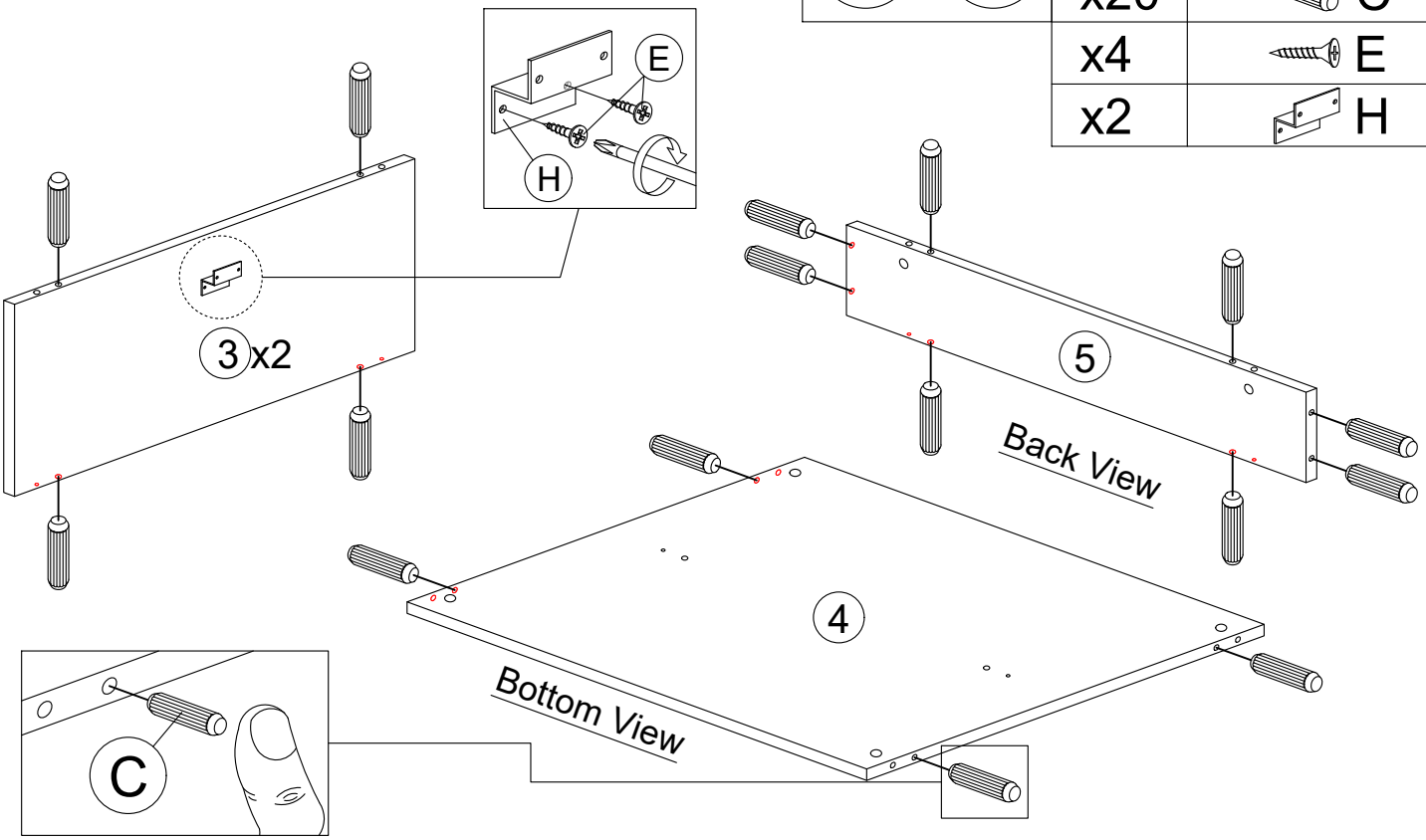

Step 2

Required/Requis/Requerido	
x38	B

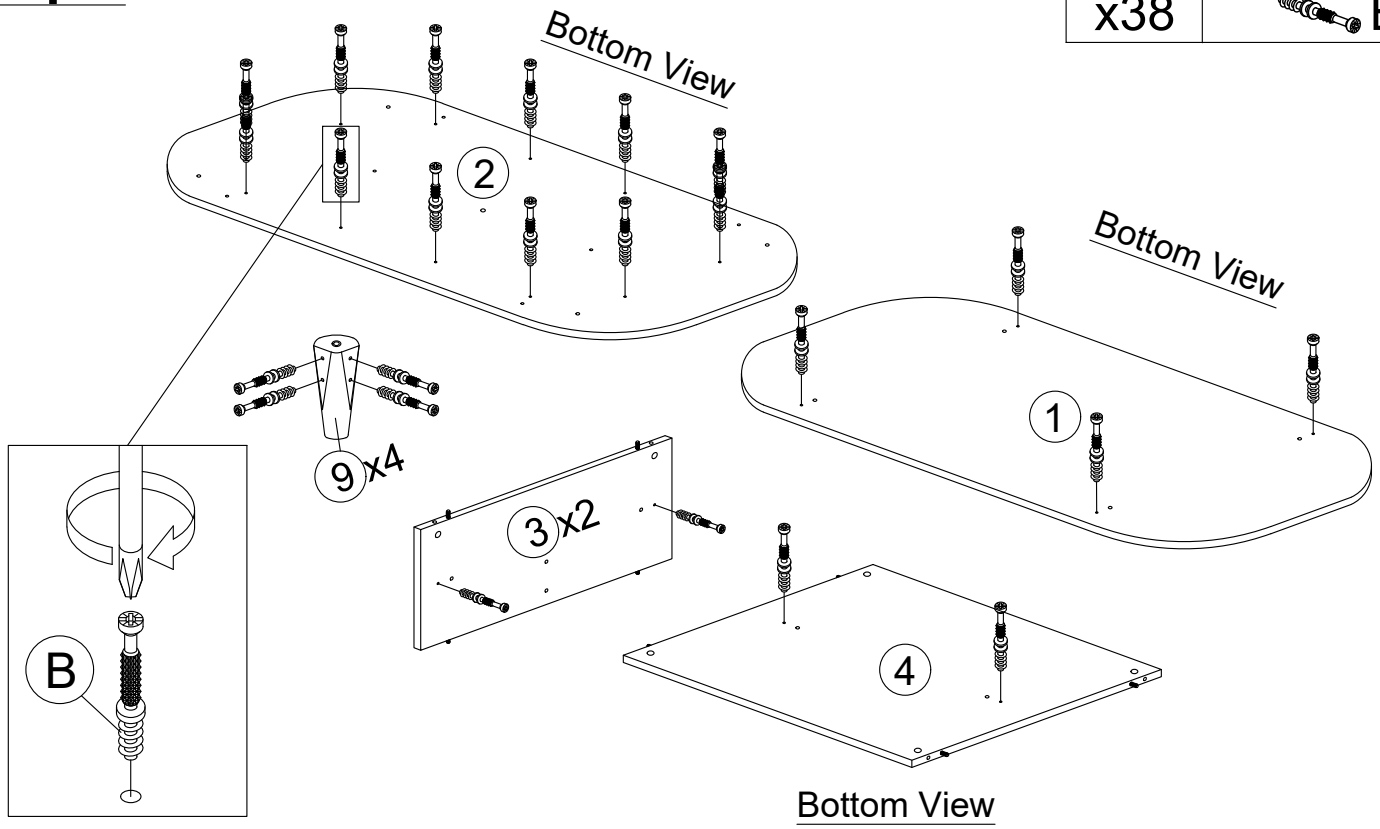

ASSEMBLY INSTRUCTION

Step 3

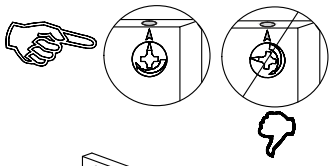

Required/Requis/Requerido	
x38	A

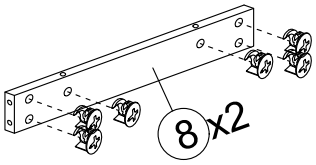

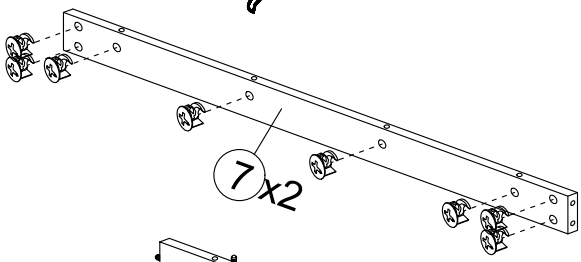

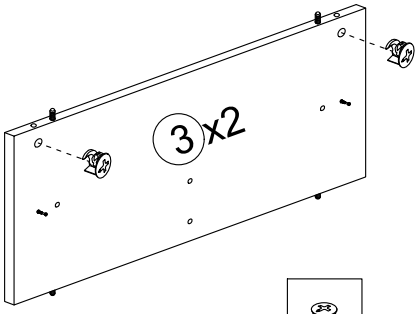

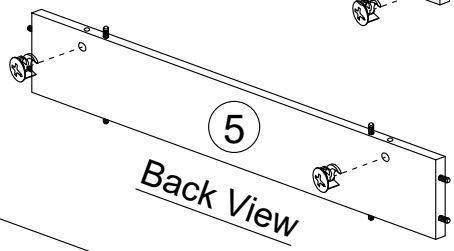

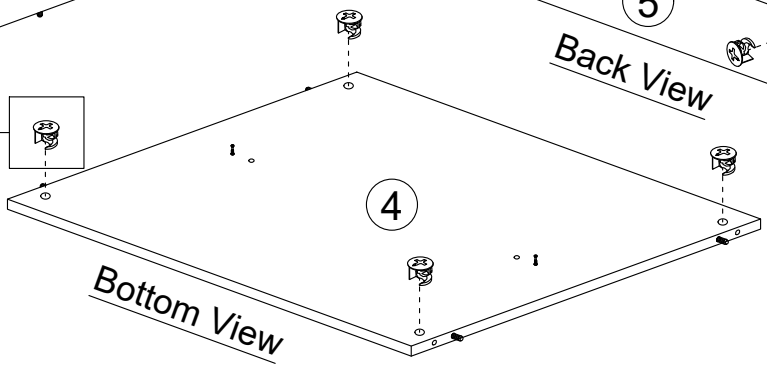

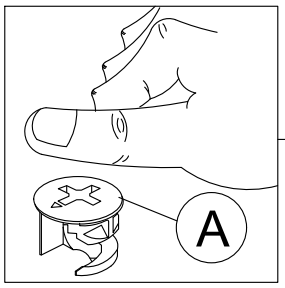

Step 4

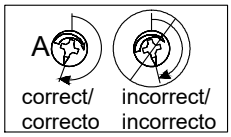

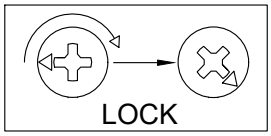

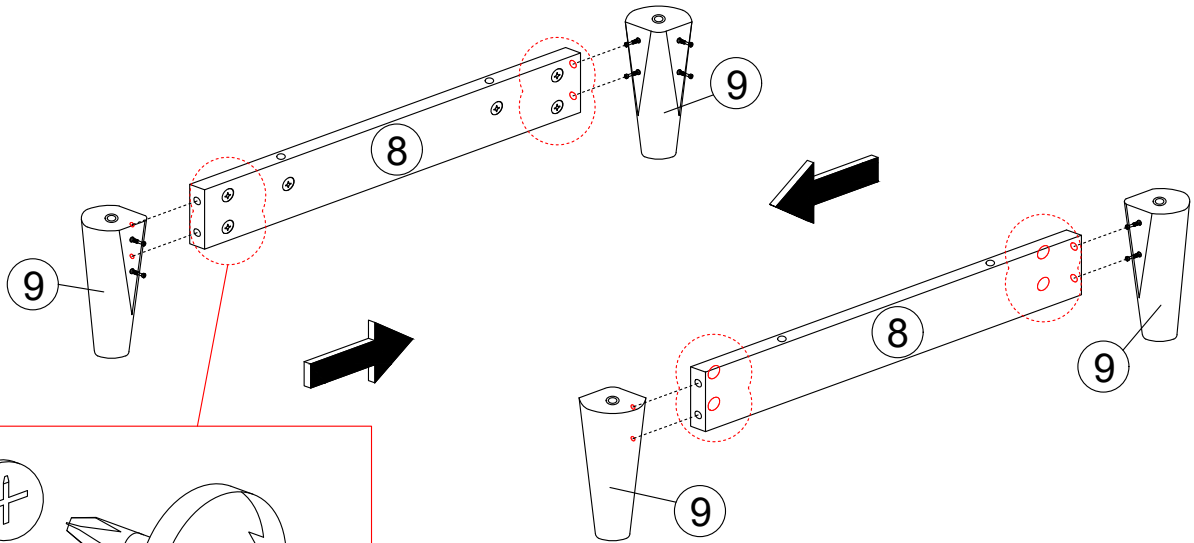

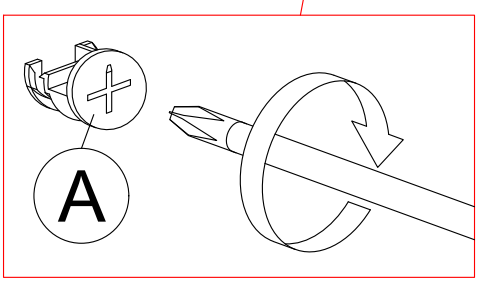

ASSEMBLY INSTRUCTION

Step 5

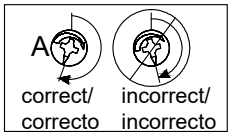

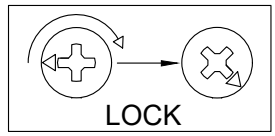

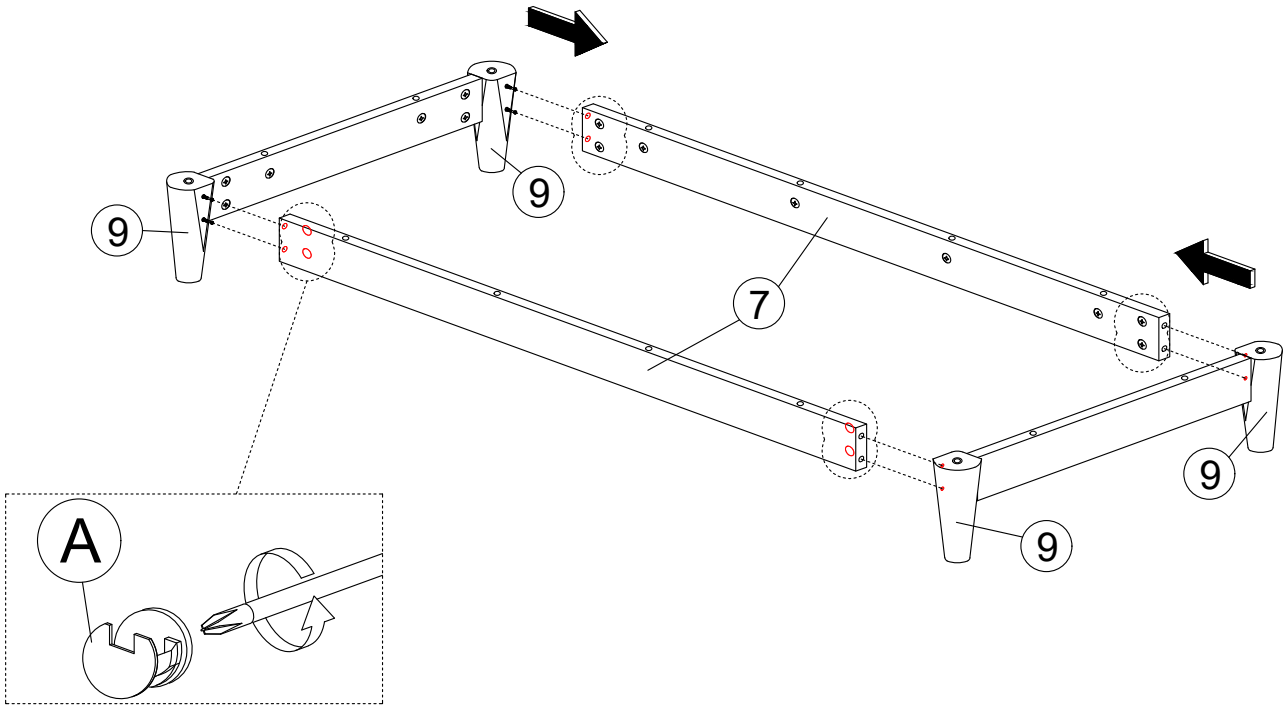

Step 6

Required/Requis/Requerido	
x1	J
x1	G

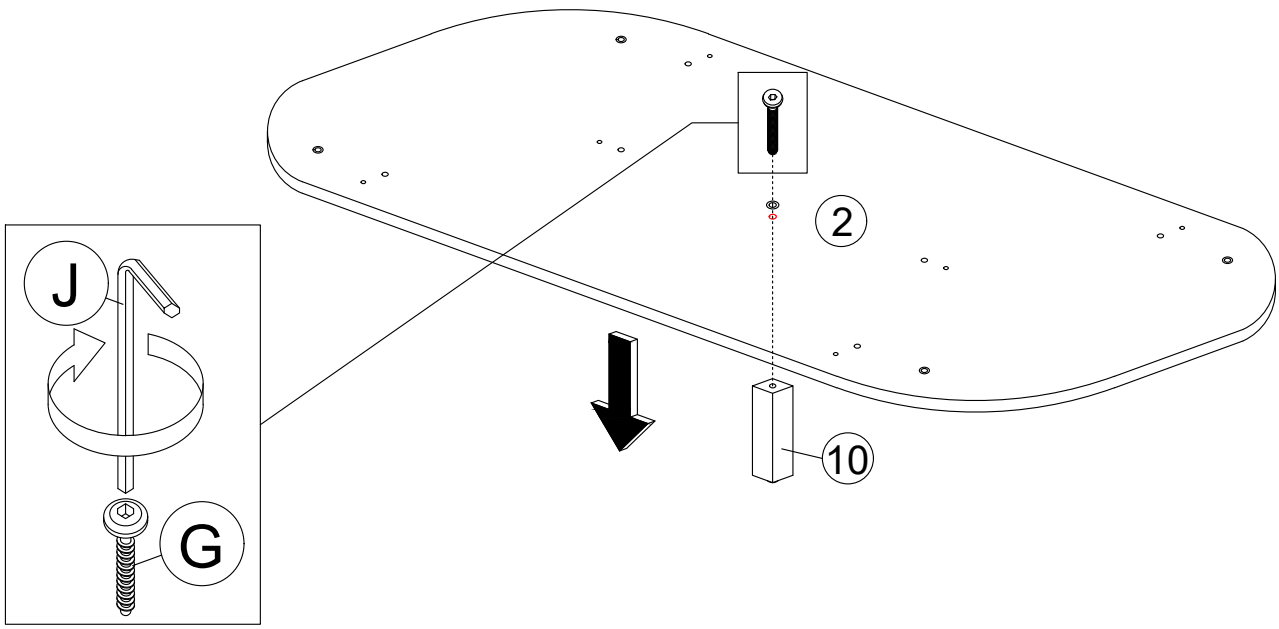

ASSEMBLY INSTRUCTION

Step 7

Required/Requis/Requerido	
x1	I
x4	F

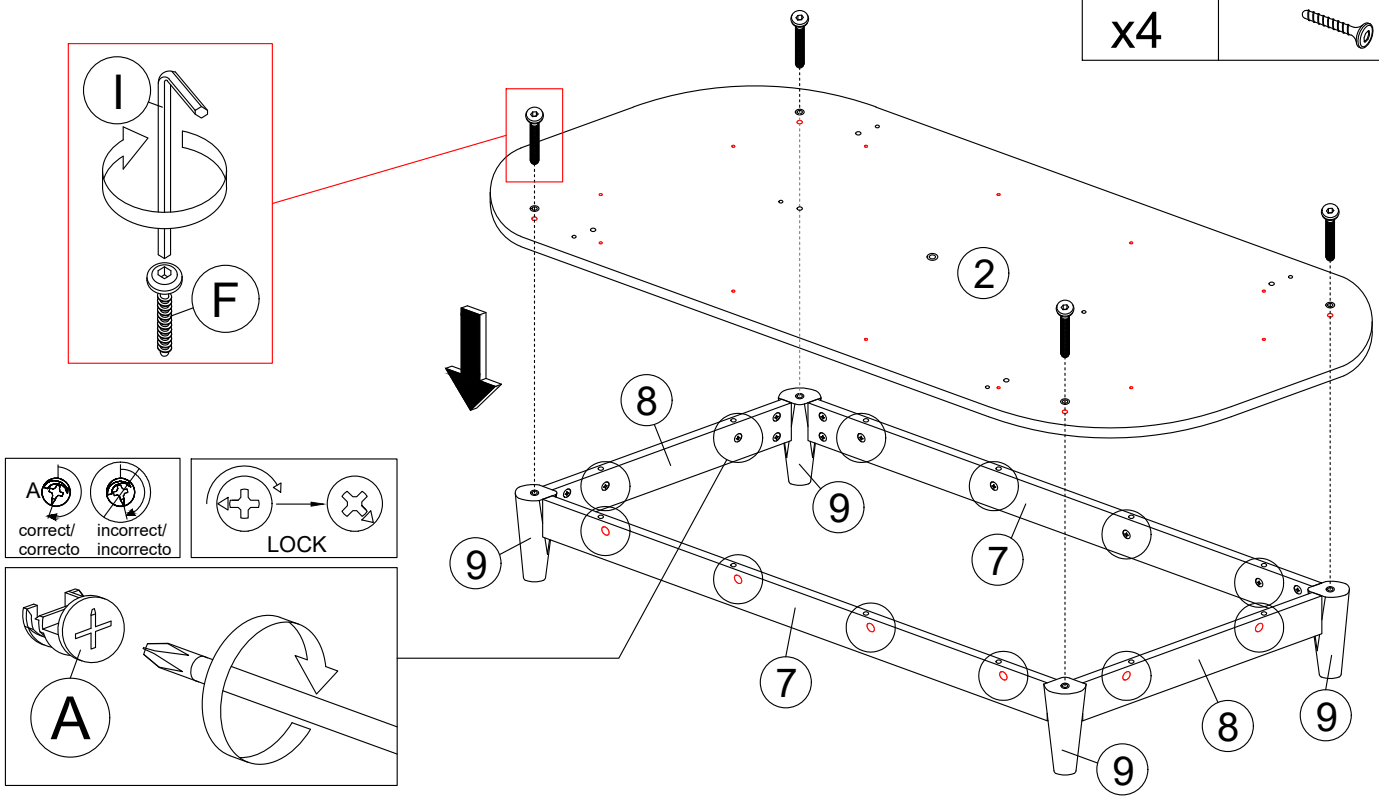

Step 8

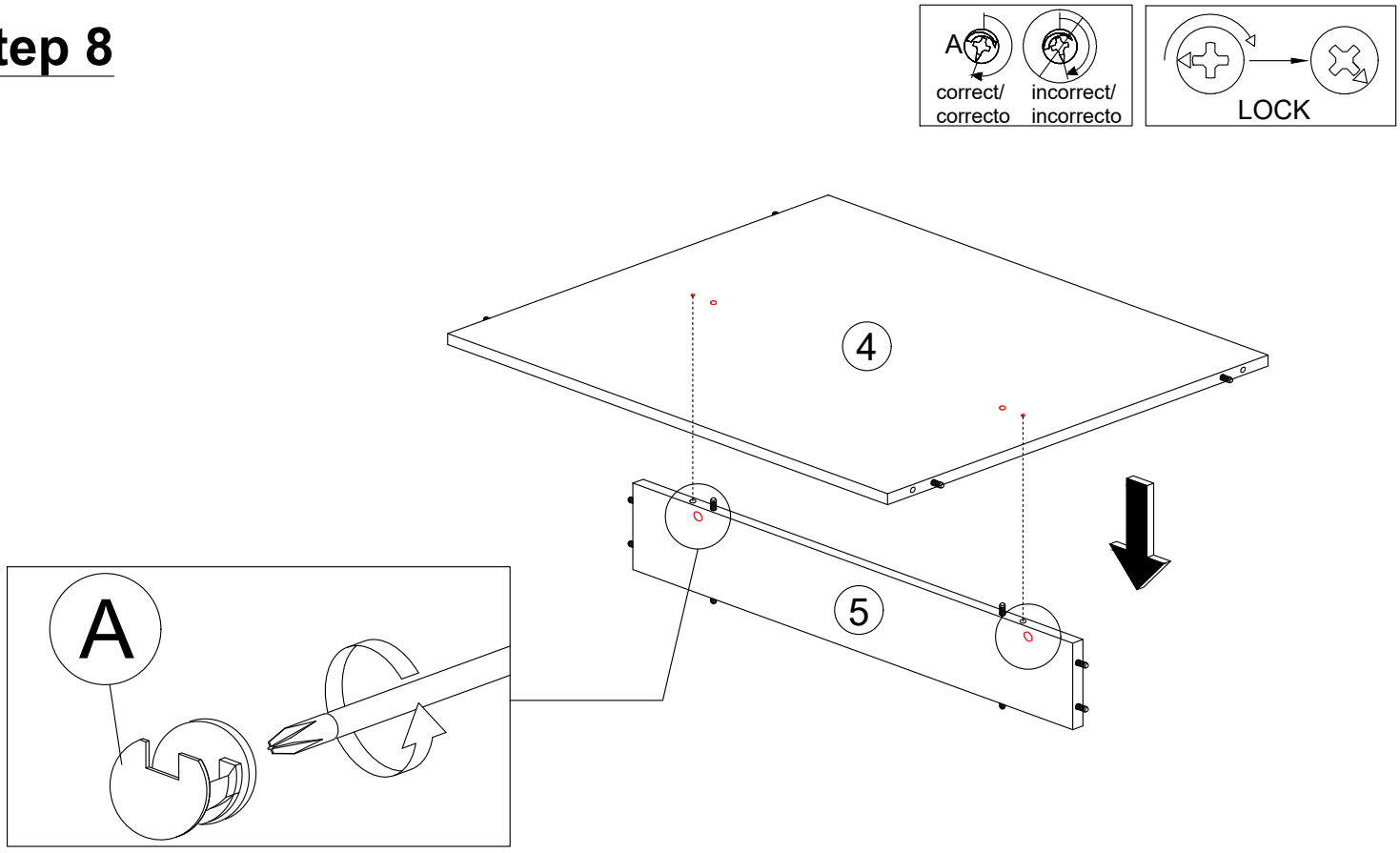

ASSEMBLY INSTRUCTION

Step 9

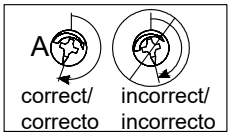

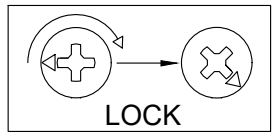

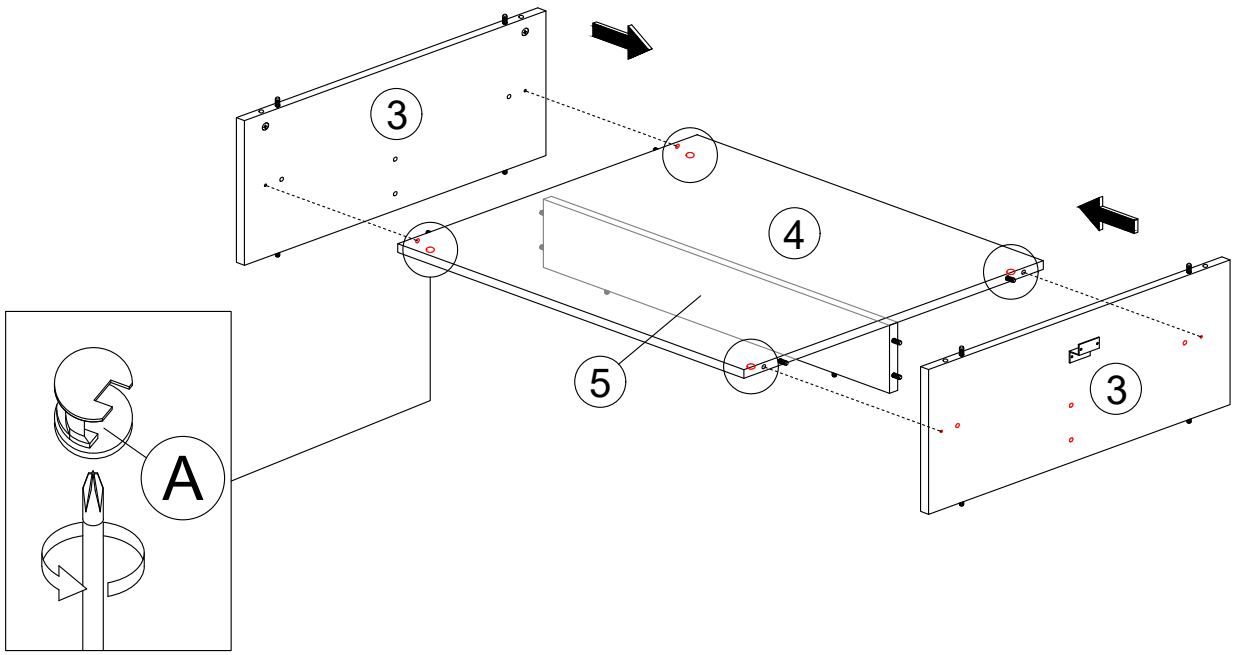

Step 10

Required/Requis/Requerido	
x6	D
x1	I

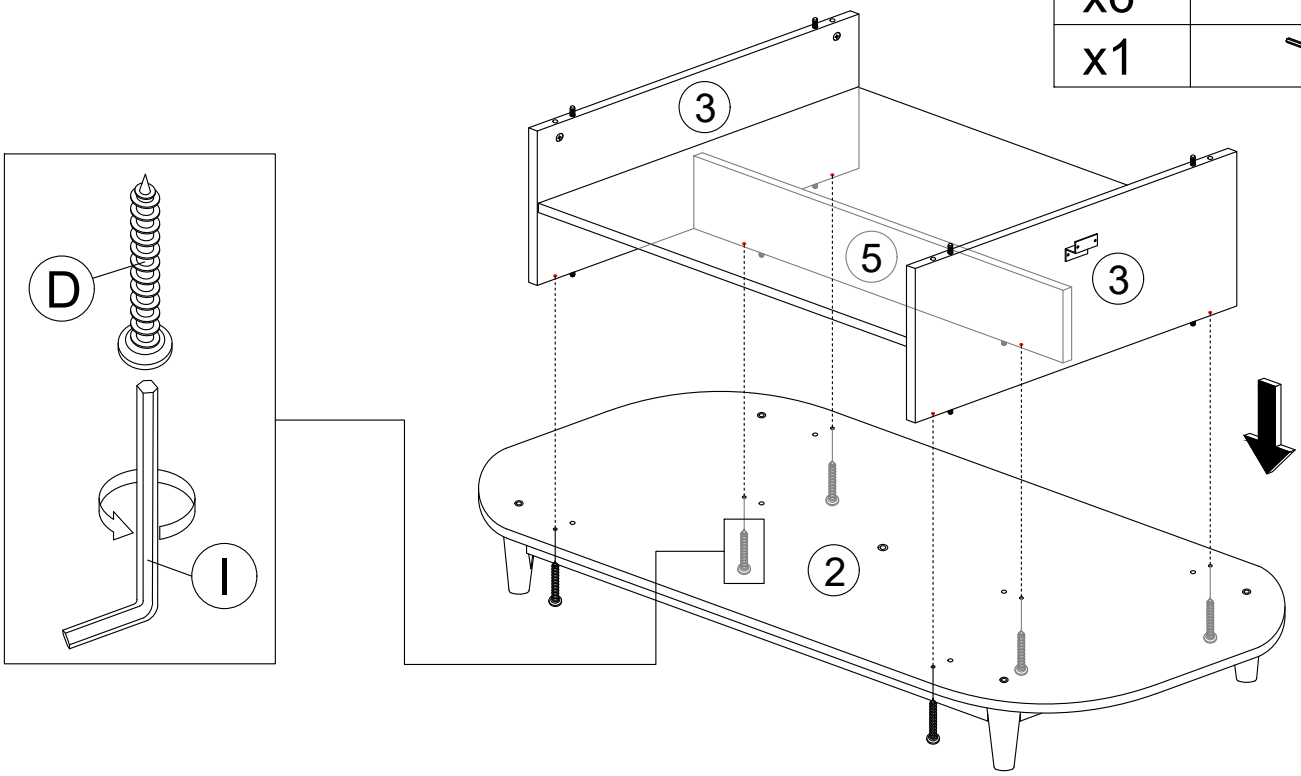

ASSEMBLY INSTRUCTION

Step 11

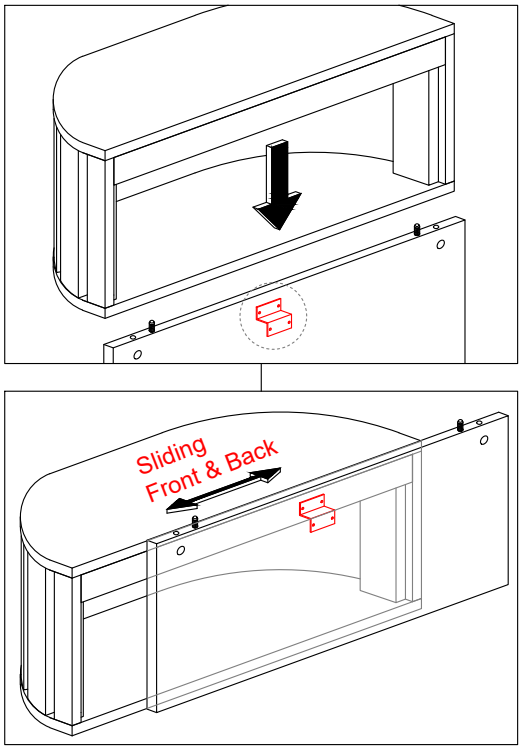

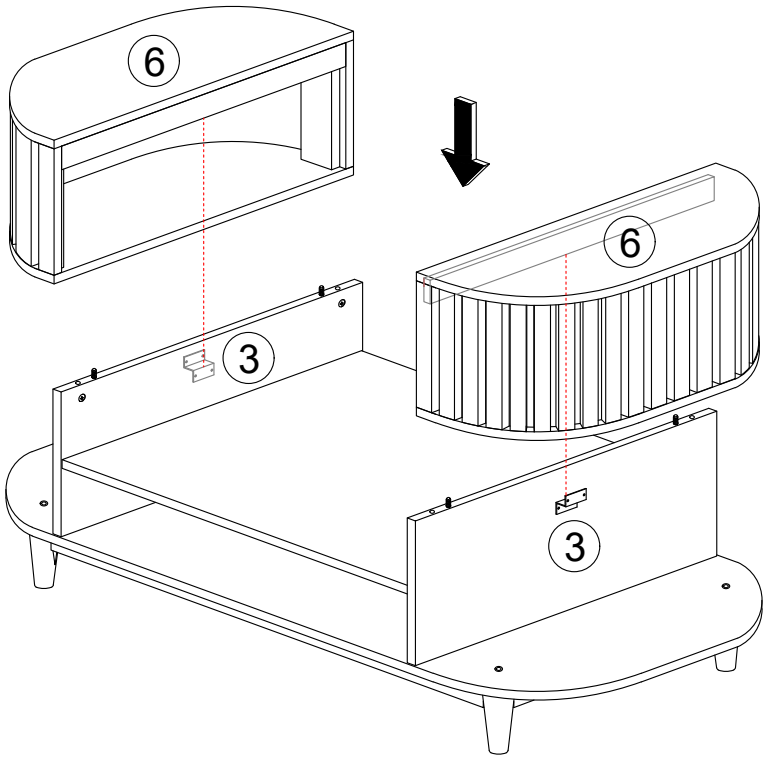

Step 12

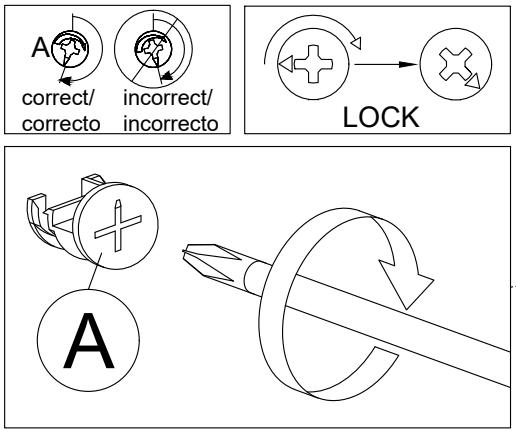

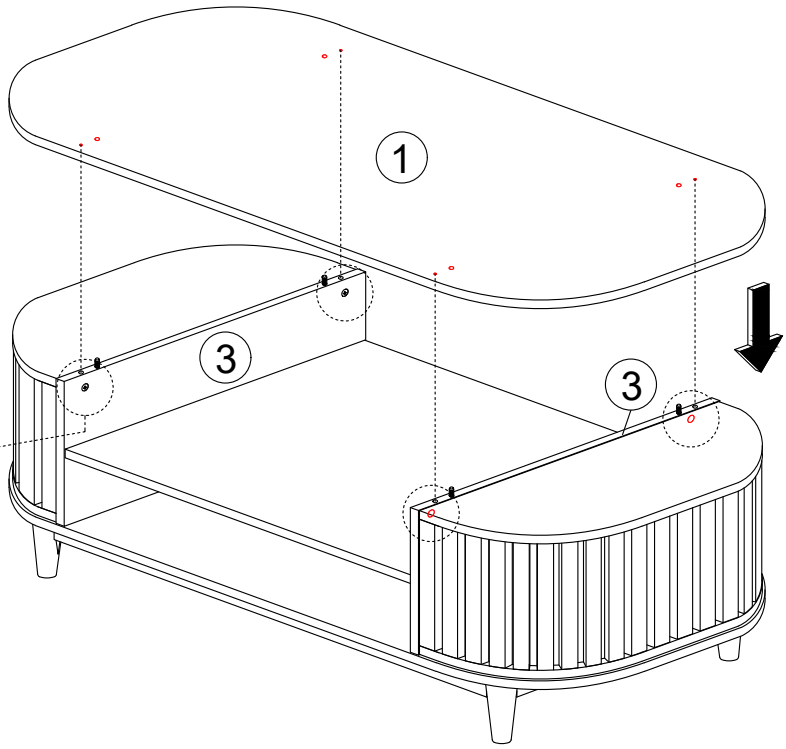

ASSEMBLY INSTRUCTION

Completed

